REFERENCE PROJECT NUMBER	FISCAL YEAR	SHEET NUMBER

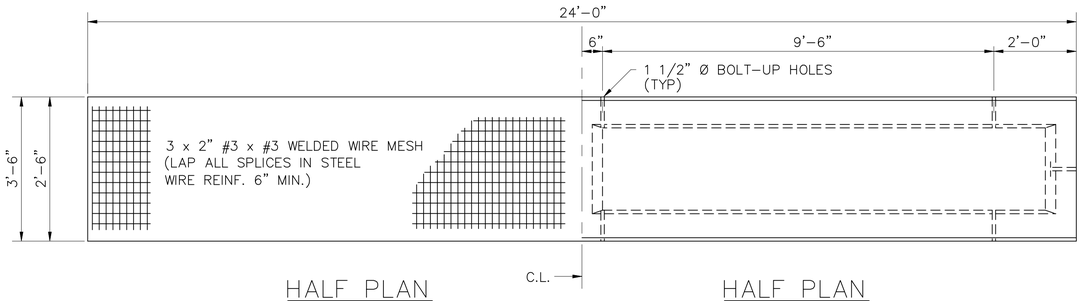

HALF PLAN

SHOWING MESH REINFORCEMENT

HALF PLAN

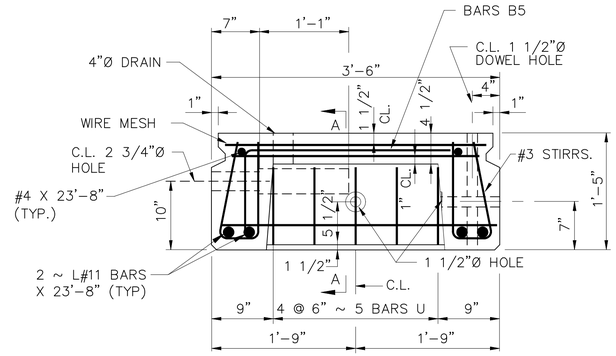

END ELEVATION ~ EXTERIOR SECTION FOR BARRIER RAIL TYPE 2C

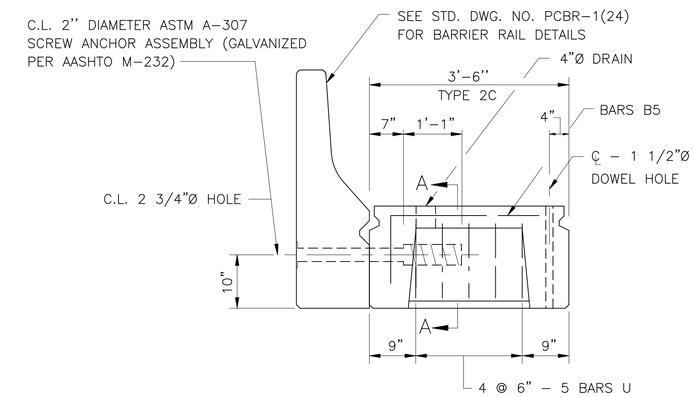

BARRIER RAIL CONNECTION DETAIL

NOTE: SCREW ANCHOR ASSEMBLY DESIGN LOAD = 50 KIPS TENSION. MANUFACTURER CERTIFICATIONS VALIDATING THAT FURNISHED/PROPERLY INSTALLED SCREW ANCHOR ASSEMBLY IS CAPABLE OF DEVELOPING TWICE THE SPECIFIED DESIGN LOAD (100 KIPS) SHALL BE SUBMITTED TO THE PROJECT ENGINEER PRIOR TO BARRIER RAIL INSTALLATION.

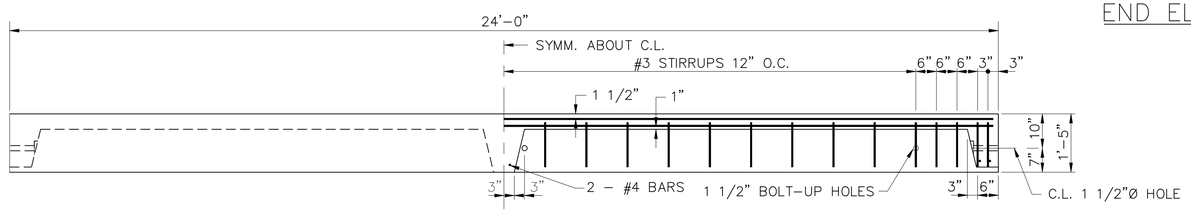

LONGITUDINAL SECTION (INTERIOR UNIT)

TYPE 1

NOTE: ADJACENT PRECAST UNITS SHALL BE LONGITUDINALLY CONNECTED WITH 1" DIA. X 1'-9" A-307 BOLTS AND STANDARD NUTS AND WASHERS.

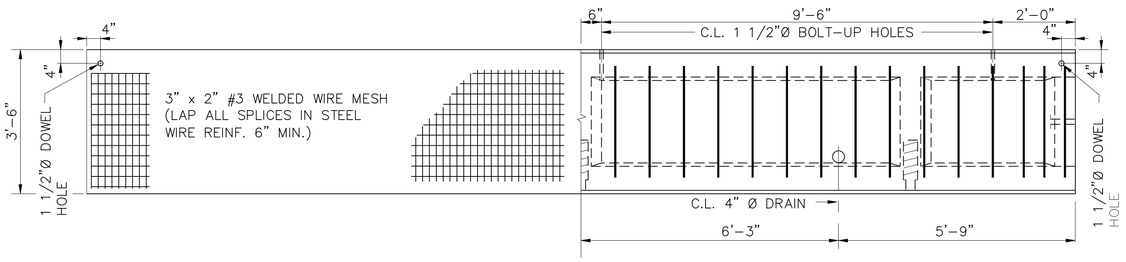

HALF PLAN

SHOWING MESH REINFORCEMENT

HALF PLAN

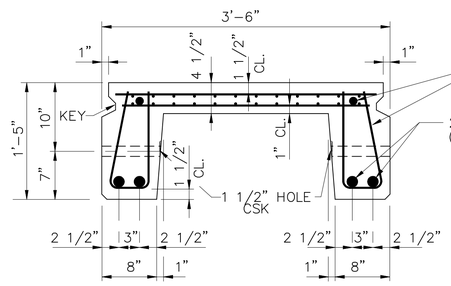

INTERIOR SECTION

TYPE 1

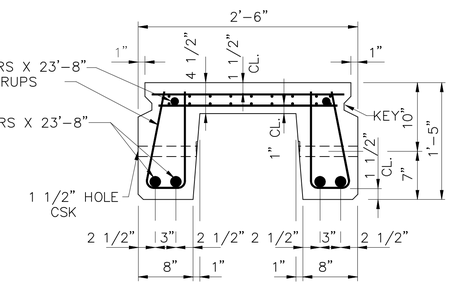

INTERIOR SECTION

TYPE 1

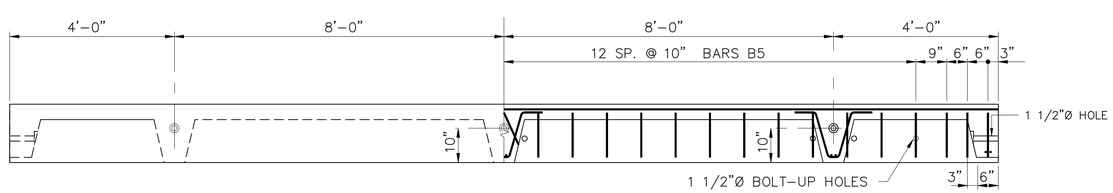

LONGITUDINAL SECTION (EXTERIOR UNIT)

TYPE 2C

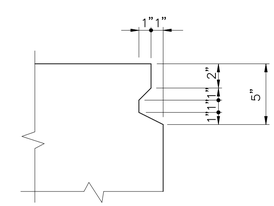

KEY DETAIL

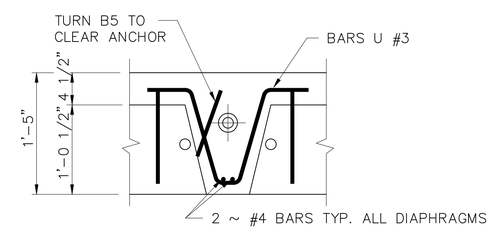

SECTION A-A

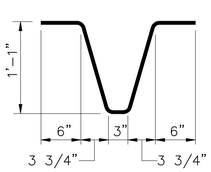

BARS U #3

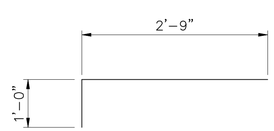

BARS B5 #3

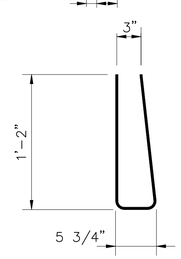

BEAM STIRRUPS BARS #3

NOTE: #4 REBARS MAY BE USED IN LIEU OF #3 REBARS.

THESE DRAWINGS REPRESENT DESIGNS PREPARED FOR USE BY THE ALABAMA DEPARTMENT OF TRANSPORTATION; AND ARE NOT TO BE COPIED, REPRODUCED, ALTERED, OR USED BY ANYONE, OR ANY ORGANIZATION, WITHOUT THE EXPRESSED WRITTEN CONSENT OF THE ALABAMA DEPARTMENT OF TRANSPORTATION REPRESENTATIVE AUTHORIZED TO APPROVE SUCH USE. ANYONE MAKING UNAUTHORIZED USE OF THESE DRAWINGS MAY BE PROSECUTED TO THE FULLEST EXTENT OF THE LAW.

DESIGN SECTION SUPERVISOR

ASSISTANT BRIDGE ENGINEER

BRIDGE ENGINEER

ALABAMA DEPARTMENT OF TRANSPORTATION

THIS STANDARD TO BE USED WTH ANY OF THE FOLLOWING STANDARDS

REVISIONS

STANDARD

PRECAST CONCRETE BRIDGE SLABS - 24' SPANS 24'-6" & 28' ROADWAYS HS20-44 LOADING

ESTIMATED QUANTITIES		STANDARD DWG. NO.
COMPUTED BY:		PC-24
VERIFIED BY:		
CHECKED BY:	DRAWN BY:	DESIGNED BY:
DATE CHECKED:	DATE DRAWN:	SCALE:

SHEET NO. 1 OF 2

U:\Standards\Precast\uscust\2007 Book\PC24.dgn

Plotted: 07-Dec-2006 10:37 AM

REFERENCE PROJECT NUMBER	FISCAL YEAR	SHEET NUMBER

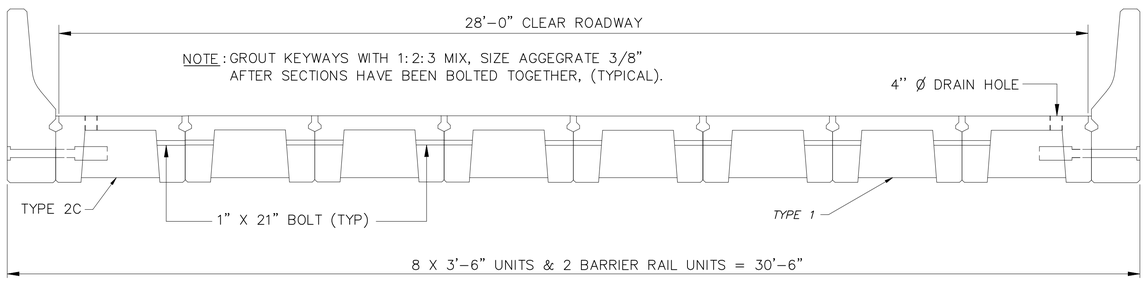

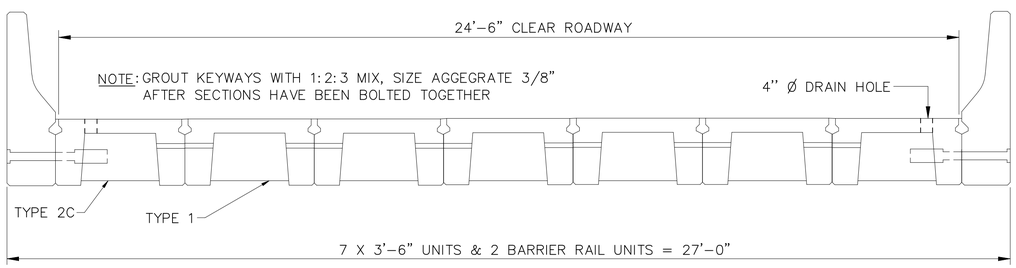

TYPICAL SECTIONS

GENERAL NOTES

1. ROADWAY: VARIABLE WIDTH ROADWAYS AS SHOWN.
2. SPECIFICATIONS: ALABAMA DEPARTMENT OF TRANSPORTATION, CURRENT EDITION.
3. DESIGN LOADING: A.A.S.H.T.O. HS20-44
4. STEEL REINFORCEMENT: REINFORCING STEEL SHALL MEET THE REQUIREMENTS OF SECTION 835 OF THE STANDARD SPECIFICATIONS. L~BARS----SHALL BE GRADE 60
5. WELDED FABRIC: SHALL CONFORM TO THE REQUIREMENTS FOR WELDED STEEL WIRE REINFORCEMENT,SECTION 835 OF THE STANDARD SPECIFICATIONS.
   THE FOLLOWING WELDED WIRE REINFORCEMENT MAY BE SUBSTITUTED FOR INDICATED:
   LINE WIRES: 9-W9.0 OR D9.0 WIRES x 23'-8" LONG SPACED AS FOLLOWS: 3", 3", 4 @ 6", 3", 3"
   CROSS WIRES: 71-W9.0 OR D9.0 WIRES x 3'-0" LONG @ 4" O.C.
   THE ABOVE REINFORCEMENT TO CONFORM TO THE REQUIREMENTS OF AASHTO M221 AND M225.
6. EXPANSION JOINTS: JOINT FILLER TO BE A.A.S.H.T.O. M-213 MODIFIED. SEALED IN ACCORDANCE WITH SUBARTICLE 832.02(c).
7. CONCRETE: CONCRETE SHALL CONFORM TO SECTION 512 OF THE STANDARD SPECIFICATIONS.
8. HARDWARE: ALL BOLTS SHALL CONFORM TO ASTM A-307 AND BE GALVANIZED IN ACCORDANCE WITH AASHTO M-232.

THESE DRAWINGS REPRESENT DESIGNS PREPARED FOR USE BY THE ALABAMA DEPARTMENT OF TRANSPORTATION; AND ARE NOT TO BE COPIED, REPRODUCED, ALTERED, OR USED BY ANYONE, OR ANY ORGANIZATION, WITHOUT THE EXPRESSED WRITTEN CONSENT OF THE ALABAMA DEPARTMENT OF TRANSPORTATION REPRESENTATIVE AUTHORIZED TO APPROVE SUCH USE. ANYONE MAKING UNAUTHORIZED USE OF THESE DRAWINGS MAY BE PROSECUTED TO THE FULLEST EXTENT OF THE LAW.

DESIGN SECTION SUPERVISOR

ASSISTANT BRIDGE ENGINEER

BRIDGE ENGINEER

ALABAMA DEPARTMENT OF TRANSPORTATION

THIS STANDARD TO BE USED WTH ANY OF THE FOLLOWING STANDARDS

REVISIONS

STANDARD

PRECAST CONCRETE BRIDGE SLABS - 24' SPANS 24'-6" & 28' ROADWAYS HS20-44 LOADING

ESTIMATED QUANTITIES	
COMPUTED BY:	
VERIFIED BY:	
CHECKED BY:	DRAWN BY:
DESIGNED BY:	
DATE CHECKED:	DATE DRAWN:
SCALE:	

STANDARD DWG. NO.

PC-24

SHEET NO. 2 OF 2

U:\Standards\Precast\uscust\2007 Book\PC24.dgn
Plotted: 07-Dec-2006 10:38 AM

REFERENCE PROJECT NUMBER	FISCAL YEAR	SHEET NUMBER

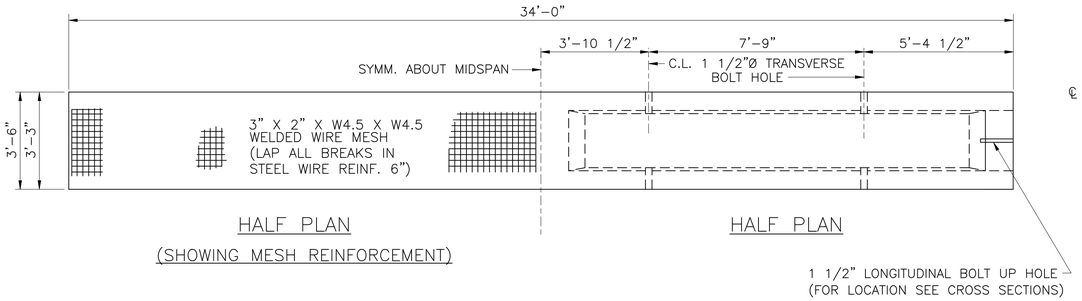

NOTE: CAST UNITS WITH 1/2" CAMBER AT MIDSPAN.

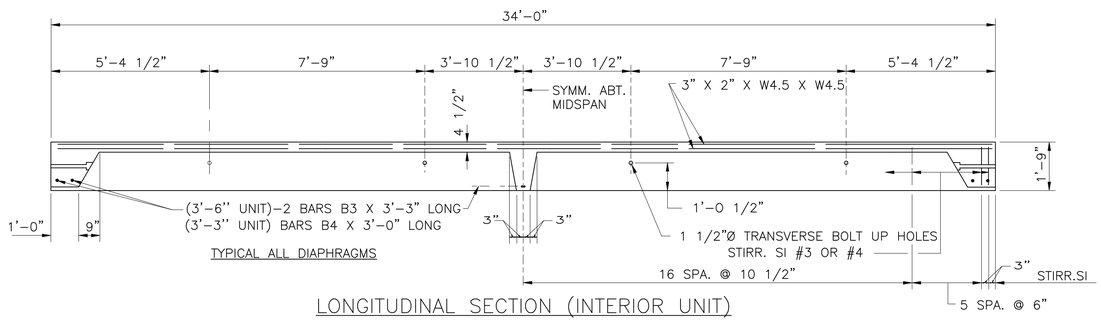

LONGITUDINAL SECTION (INTERIOR UNIT)

TYPE 1

NOTE: ADJACENT PRECAST UNITS SHALL BE LONGITUDINALLY CONNECTED WITH 1" DIA. X 3'-0" A-307 BOLTS AND STANDARD NUTS AND WASHERS.

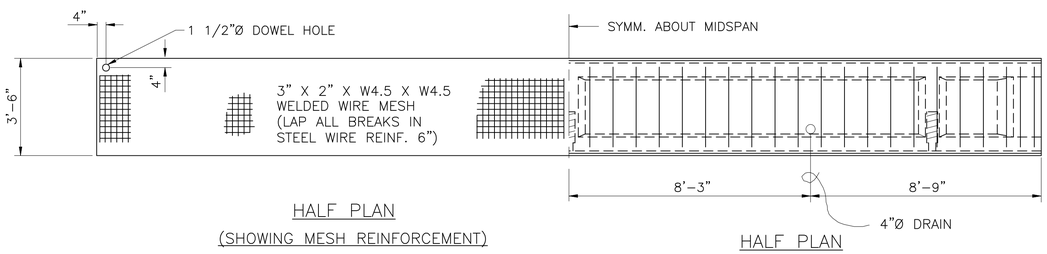

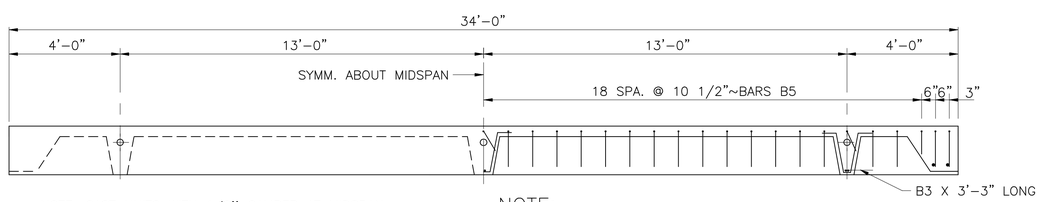

NOTE: CAST UNITS WITH 1/2" CAMBER AT MIDSPAN.

NOTE:
USE THESE DETAILS ONLY FOR EXT. UNITS WHEN PRECAST BARRIER RAIL IS REQUIRED

LONGITUDINAL SECTION (EXTERIOR UNIT)

TYPE 2C

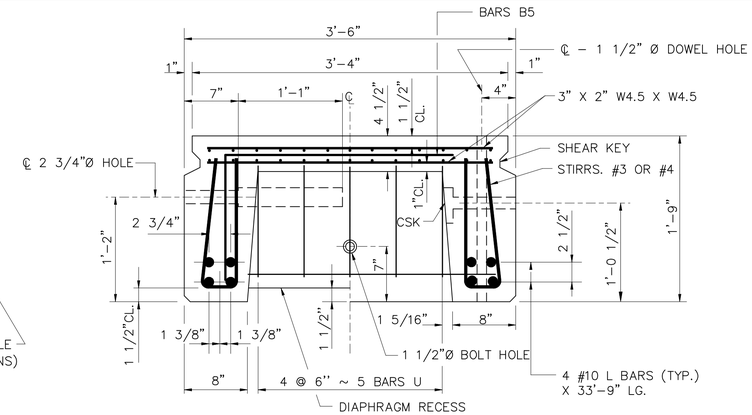

EXTERIOR SECTION TYPE 2C

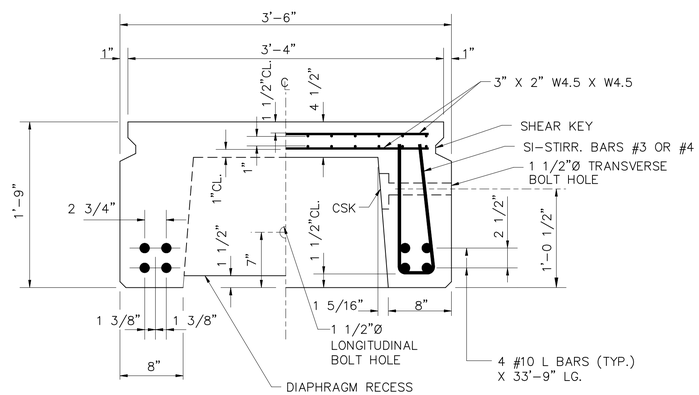

INTERIOR SECTION TYPE 1

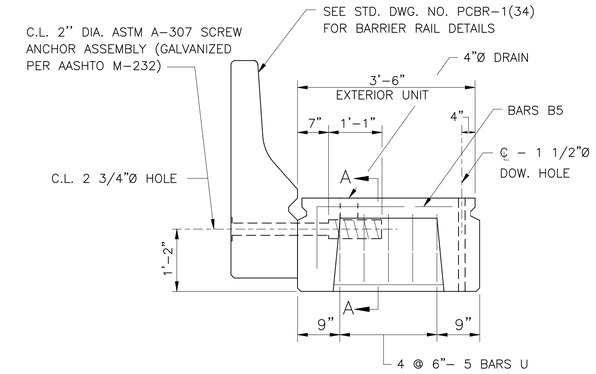

BARRIER RAIL CONNECTION DETAIL

NOTE: SCREW ANCHOR ASSEMBLY DESIGN LOAD = 50 KIPS TENSION. MANUFACTURER CERTIFICATIONS VALIDATING THAT FURNISHED/PROPERLY INSTALLED SCREW ANCHOR ASSEMBLY IS CAPABLE OF DEVELOPING TWICE THE SPECIFIED DESIGN LOAD (100 KIPS) SHALL BE SUBMITTED TO THE PROJECT ENGINEER PRIOR TO BARRIER RAIL INSTALLATION.

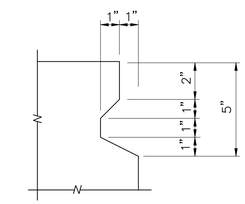

SHEAR KEY DETAIL

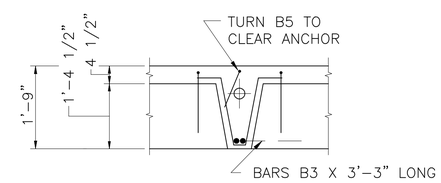

SECTION "A-A"

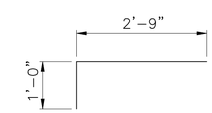

BARS B5 #3

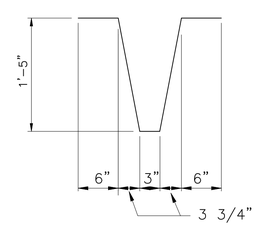

BARS U #3

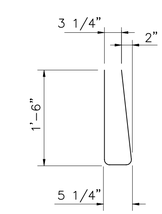

BEAM STIRRUPS BARS #3 OR #4-SI

THESE DRAWINGS REPRESENT DESIGNS PREPARED FOR USE BY THE ALABAMA DEPARTMENT OF TRANSPORTATION; AND ARE NOT TO BE COPIED, REPRODUCED, ALTERED, OR USED BY ANYONE, OR ANY ORGANIZATION, WITHOUT THE EXPRESSED WRITTEN CONSENT OF THE ALABAMA DEPARTMENT OF TRANSPORTATION REPRESENTATIVE AUTHORIZED TO APPROVE SUCH USE. ANYONE MAKING UNAUTHORIZED USE OF THESE DRAWINGS MAY BE PROSECUTED TO THE FULLEST EXTENT OF THE LAW.

DESIGN SECTION SUPERVISOR

ASSISTANT BRIDGE ENGINEER

BRIDGE ENGINEER

ALABAMA DEPARTMENT OF TRANSPORTATION

THIS STANDARD TO BE USED WTH ANY OF THE FOLLOWING STANDARDS

REVISIONS

STANDARD

PRECAST CONCRETE BRIDGE SLABS - 34' SPANS 24'-6" & 28'-0" ROADWAYS HS20-44 LOADING

CHECKED BY:	DRAWN BY:	ESTIMATED QUANTITIES
		COMPUTED BY:
		VERIFIED BY:
DATE CHECKED:	DATE DRAWN:	DESIGNED BY:
		SCALE:

STANDARD DWG. NO.

PC-34-2

SHEET NO. 1 OF 2

U:\Standards\Precast\uscust\2007 Book\PC34_2.dgn

Plotted: 07-Dec-2006 10:40 AM

REFERENCE PROJECT NUMBER	FISCAL YEAR	SHEET NUMBER

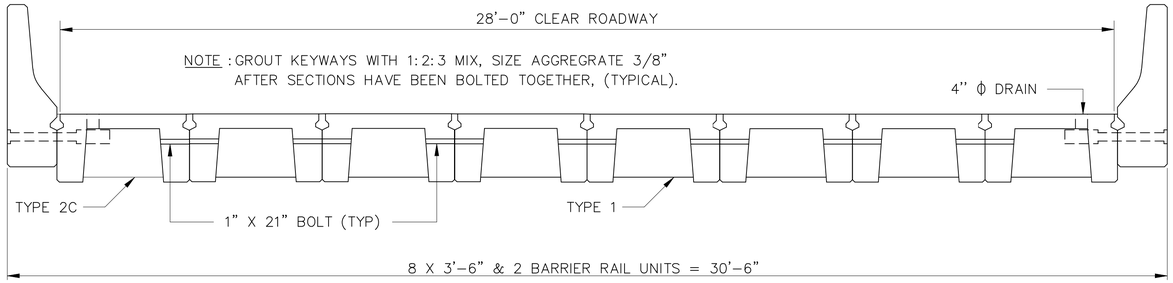

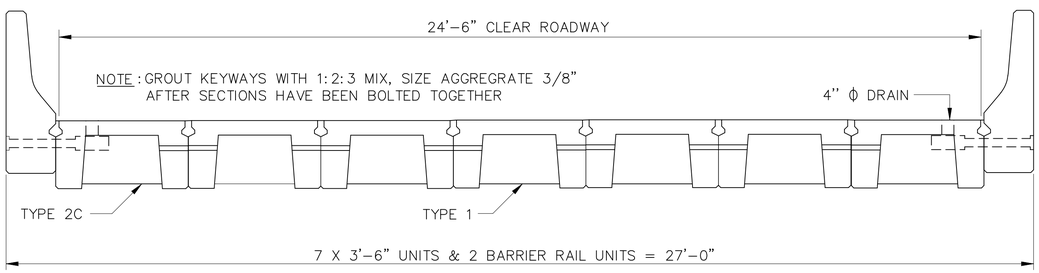

TYPICAL SECTIONS

GENERAL NOTES

1. ROADWAY: VARIABLE WIDTH ROADWAYS AS SHOWN.
2. SPECIFICATIONS: ALABAMA DEPARTMENT OF TRANSPORTATION, CURRENT EDITION.
3. DESIGN LOADING: A.A.S.H.T.O. HS20-44
4. STEEL REINFORCEMENT: REINFORCING STEEL SHALL MEET THE REQUIREMENTS OF SECTION 835 OF THE STANDARD SPECIFICATIONS. L~BARS----SHALL BE GRADE 60
5. WELDED FABRIC: SHALL CONFORM TO THE REQUIREMENTS FOR WELDED STEEL WIRE REINFORCEMENT,SECTION 835 OF THE STANDARD SPECIFICATIONS.
   THE FOLLOWING WELDED WIRE REINFORCEMENT MAY BE SUBSTITUTED FOR THE MESH INDICATED:
   LINE WIRES: 9-W9.0 OR D9.0 WIRES x 33'-8" LONG SPACED AS FOLLOWS: 3", 3", 4 @ 6", 3", 3"
   CROSS WIRES: 81-W11.3 OR D11.3 WIRES x 3'-0" LONG @ 5" O.C.
   THE ABOVE REINFORCEMENT TO CONFORM TO THE REQUIREMENTS OF AASHTO M221 AND M225.
6. EXPANSION JOINTS: JOINT FILLER TO BE A.A.S.H.T.O. M-213 MODIFIED. SEALED IN ACCORDANCE WITH SUBARTICLE 832.02(c).
7. CONCRETE: CONCRETE SHALL CONFORM TO SECTION 512 OF THE STANDARD SPECIFICATIONS. COMPRESSIVE STRENGTH SHALL BE 5,000 P.S.I.
8. HARDWARE: ALL BOLTS SHALL CONFORM TO ASTM A-307 AND BE GALVANIZED IN ACCORDANCE WITH AASHTO M-232.

THESE DRAWINGS REPRESENT DESIGNS PREPARED FOR USE BY THE ALABAMA DEPARTMENT OF TRANSPORTATION, AND ARE NOT TO BE COPIED, REPRODUCED, ALTERED, OR USED BY ANYONE, OR ANY ORGANIZATION, WITHOUT THE EXPRESSED WRITTEN CONSENT OF THE ALABAMA DEPARTMENT OF TRANSPORTATION REPRESENTATIVE AUTHORIZED TO APPROVE SUCH USE. ANYONE MAKING UNAUTHORIZED USE OF THESE DRAWINGS MAY BE PROSECUTED TO THE FULLEST EXTENT OF THE LAW.

DESIGN SECTION SUPERVISOR

ASSISTANT BRIDGE ENGINEER

BRIDGE ENGINEER

ALABAMA DEPARTMENT OF TRANSPORTATION

THIS STANDARD TO BE USED WTH ANY OF THE FOLLOWING STANDARDS

REVISIONS

STANDARD

PRECAST CONCRETE BRIDGE SLABS - 34' SPANS 24'-6" & 28'-0" ROADWAYS HS20-44 LOADING

ESTIMATED QUANTITIES		STANDARD DWG. NO.
COMPUTED BY:		PC-34-2
VERIFIED BY:		
CHECKED BY:	DRAWN BY:	DESIGNED BY:
DATE CHECKED:	DATE DRAWN:	SCALE:
		SHEET NO. 2 OF 2

U:\Standards\Precast\uscust\2007 Book\PC34_2.dgn
Plotted: 07-Dec-2006 10:40 AM

REFERENCE PROJECT NUMBER	FISCAL YEAR	SHEET NUMBER

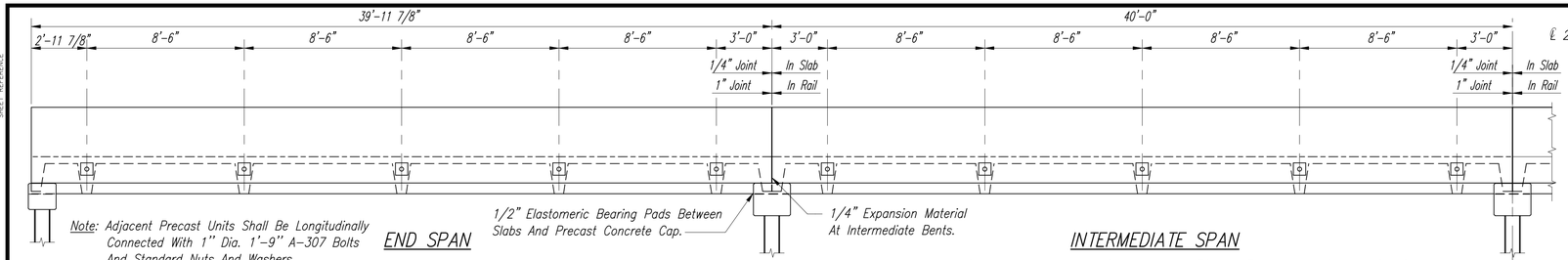

Note: Adjacent Precast Units Shall Be Longitudinally Connected With 1" Dia. 1'-9" A-307 Bolts And Standard Nuts And Washers.

END SPAN

INTERMEDIATE SPAN

ELEVATION

Note: Screw Anchor Assembly Design Load = 50 Kips Tension. Manufacturer Certifications Validating That Furnished/Properly Installed Screw Anchor Assembly Is Capable Of Developing Twice The Specified Design Load (100 Kips) Shall Be Submitted To The Project Engineer Prior To Barrier Rail Installation.

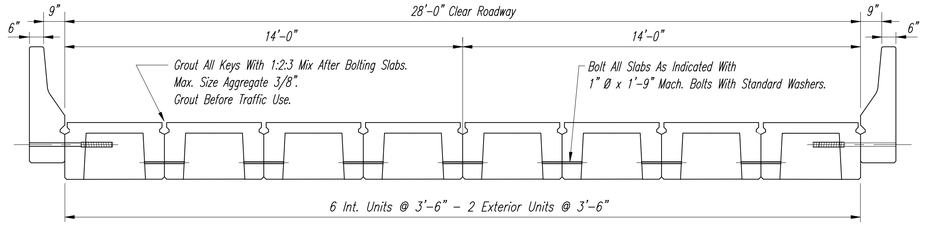

SECTION OF ROADWAY

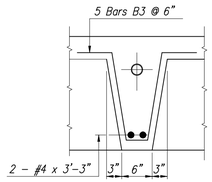

SECTION A-A

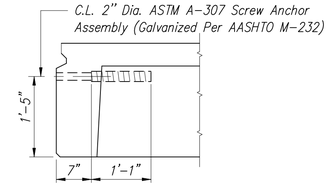

BARRIER ANCHOR DETAIL

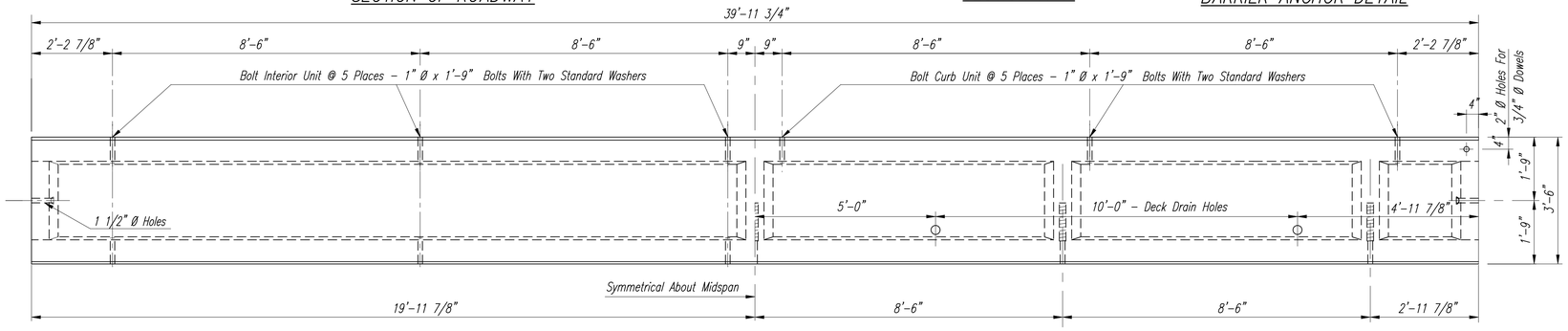

HALF PLAN - INTERIOR UNIT

HALF PLAN - EXTERIOR UNIT

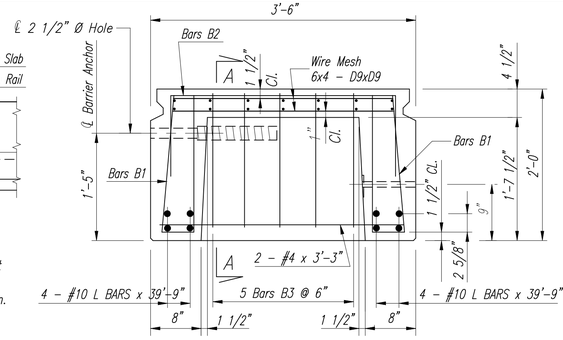

EXTERIOR TYPE 2C SECTION

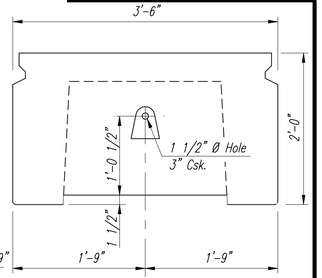

END ELEVATION

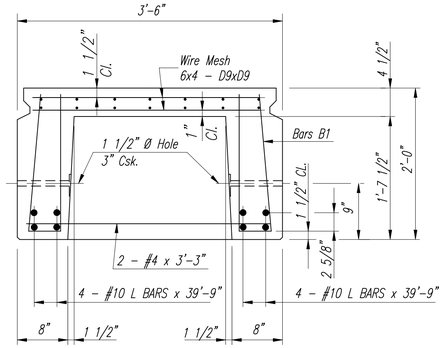

INTERIOR TYPE 1 SECTION

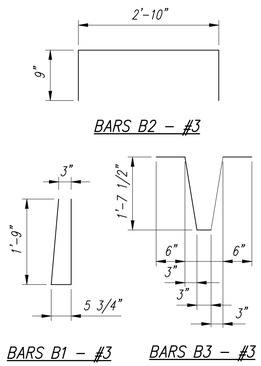

BARS B2 - #3

BARS B1 - #3

BARS B3 - #3

BAR BENDING DETAILS

Dimensions Are Out To Out

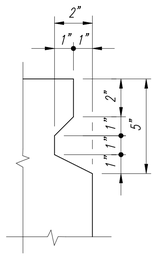

KEY DETAIL

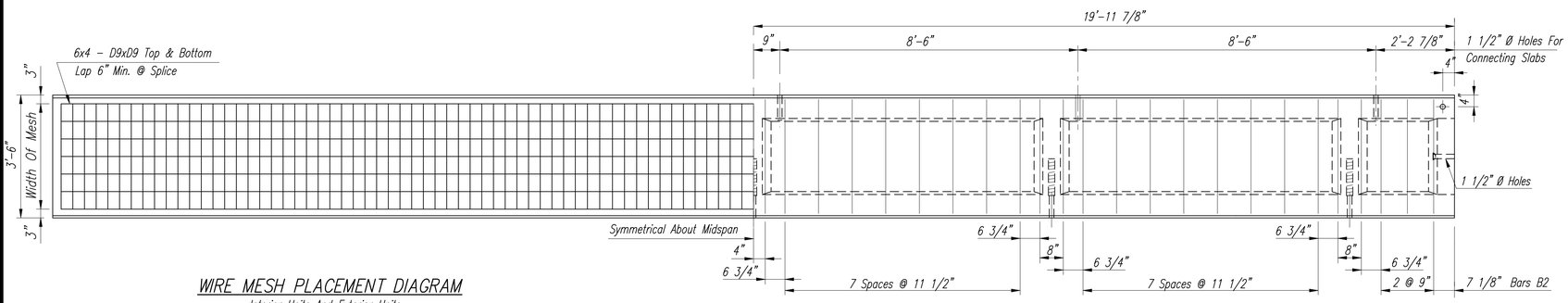

WIRE MESH PLACEMENT DIAGRAM

Interior Units And Exterior Units

HALF PLAN - EXTERIOR UNIT

Showing Additional Top Reinforcing Steel

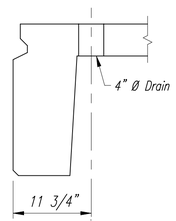

SECTION AT DRAIN

GENERAL NOTES:

1. SPECIFICATIONS: Alabama Department Of Transportation, Current Edition.
2. STEEL REINFORCEMENT: Reinforcing Steel Shall Meet The Requirements Of Section 835 Of The Standard Specifications. L-Bars-----Shall Be Grade 60
3. WELDED FABRIC: Shall Conform To The Requirements For Welded Steel Wire Reinforcement, Section 835 Of The Standard Specifications. Also Shall Conform To The Requirements Of AASHTO M221 And M225.
4. EXPANSION JOINTS: Joint Filler To Be AASHTO M-213 Modified. Sealed In Accordance With Subarticle 832.02(c)
5. CONCRETE: Concrete Shall Conform To Section 512 Of The Standard Specifications. Compressive Stregth Shall Be 4,500 p.s.i. Min.
6. HARDWARE: All Bolts Shall Conform To ASTM A-307 And Be Galvanized In Accordance With AASHTO M-232.

DESIGN DATA:

Specifications:.....A.A.S.H.T.O., 1992 And Interims.
Design Loading:.....HS 20-44
f_s = 24,000 p.s.i.; f_m = 30,000 p.s.i.; f_c = 1,800 p.s.i.; n = 8

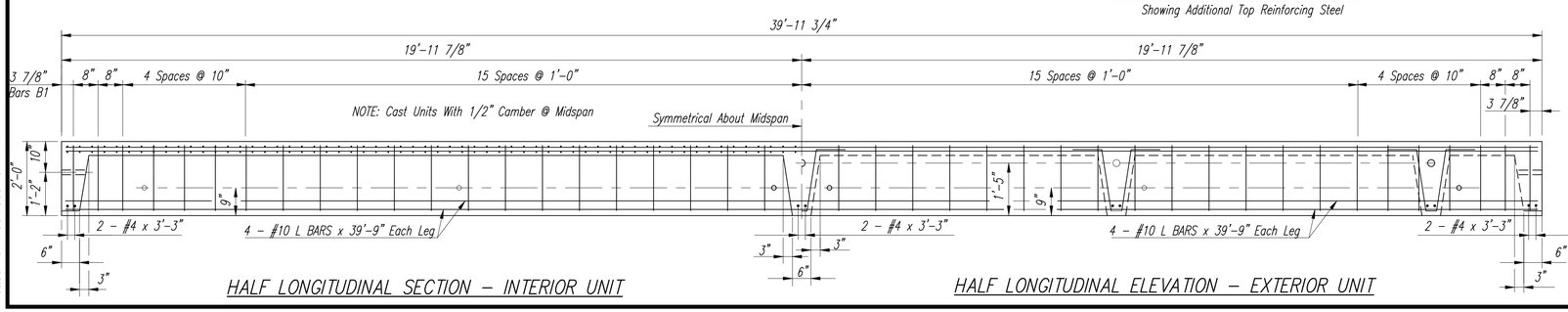

HALF LONGITUDINAL SECTION - INTERIOR UNIT

HALF LONGITUDINAL ELEVATION - EXTERIOR UNIT

THESE DRAWINGS REPRESENT DESIGNS PREPARED FOR USE BY THE ALABAMA DEPARTMENT OF TRANSPORTATION; AND ARE NOT TO BE COPIED, REPRODUCED, ALTERED, OR USED BY ANYONE, OR ANY ORGANIZATION, WITHOUT THE EXPRESSED WRITTEN CONSENT OF THE ALABAMA DEPARTMENT OF TRANSPORTATION REPRESENTATIVE AUTHORIZED TO APPROVE SUCH USE. ANYONE MAKING UNAUTHORIZED USE OF THESE DRAWINGS MAY BE PROSECUTED TO THE FULLEST EXTENT OF THE LAW.

DESIGN SECTION SUPERVISOR

ASSISTANT BRIDGE ENGINEER

BRIDGE ENGINEER

ALABAMA DEPARTMENT OF TRANSPORTATION

THIS STANDARD TO BE USED WTH ANY OF THE FOLLOWING STANDARDS

REVISIONS

STANDARD

40 FT. PRECAST CONCRETE SPAN 28'-0" CLEAR ROADWAY

ESTIMATED QUANTITIES	STANDARD DWG. NO.
COMPUTED BY:	PC-40
VERIFIED BY:	
CHECKED BY: / DRAWN BY:	DESIGNED BY:
DATE CHECKED: / DATE DRAWN:	SCALE:
	SHEET NO. 1 OF 1

U:\Standards\Precast\uscust\2007 Book\PC40.dgn
Plotted: 07-Dec-2006 10:44 AM

REFERENCE PROJECT NUMBER	FISCAL YEAR	SHEET NUMBER

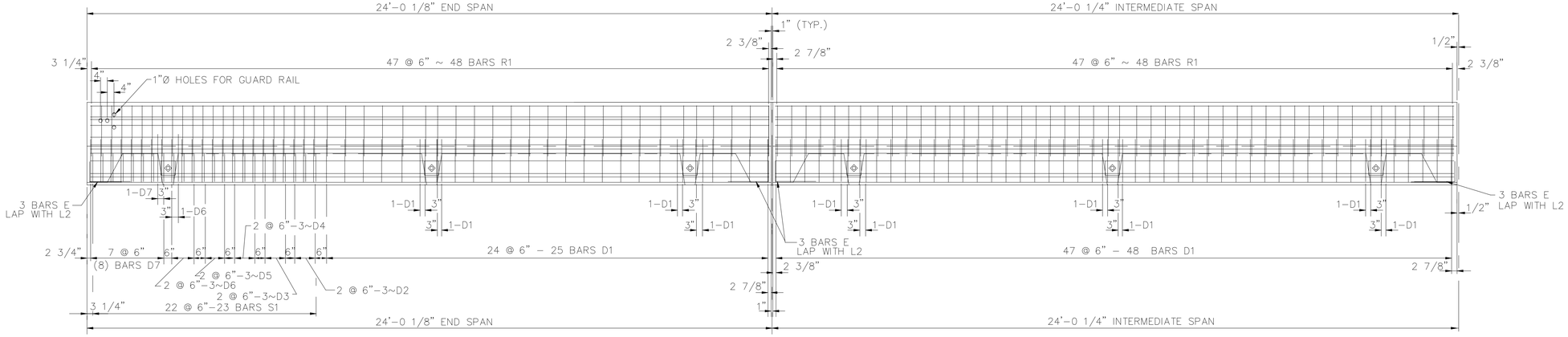

END SPAN — ELEVATION — INTERMEDIATE SPAN

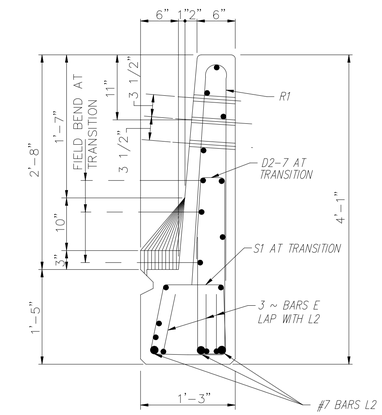

END ELEVATION

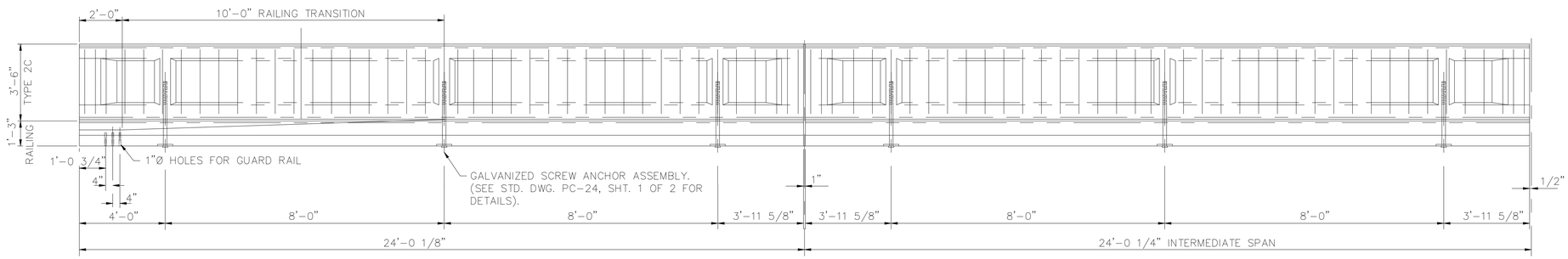

END SPAN — PLAN — INTERMEDIATE SPAN

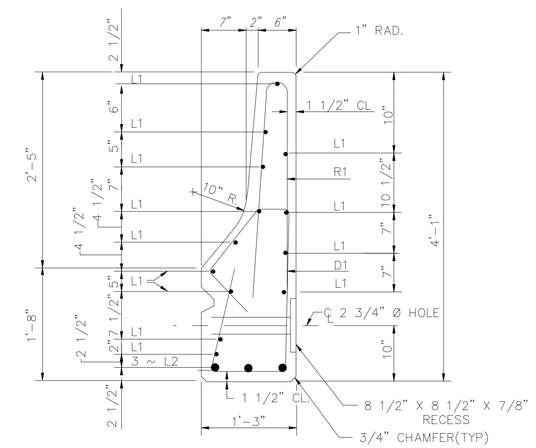

TYPICAL SECTION

L1 BARS-#4
L2 BARS - #7

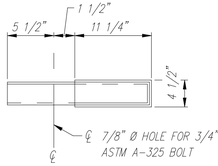

TOP

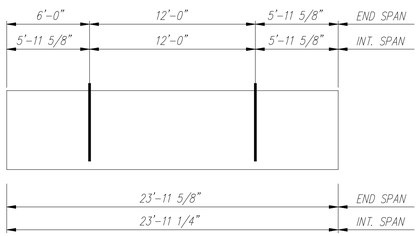

PICKUP POINTS

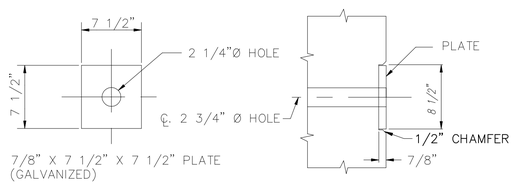

ANCHOR PLATE DETAIL

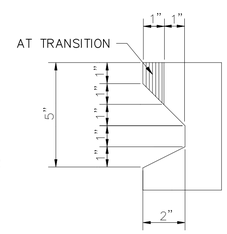

KEYWAY DETAIL

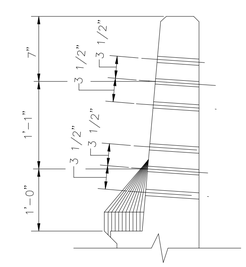

GUARD RAIL ATTACHMENT FOR TYPE 13 ANCHOR

SEE END ELEVATION THIS SH. FOR DETAILS & DIMENSIONS NOT SHOWN.

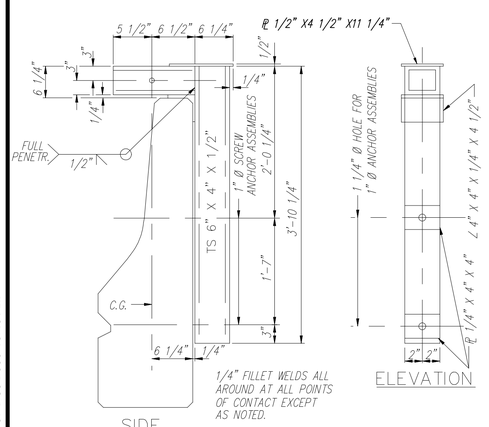

SIDE — ELEVATION

HANDLING DEVICE

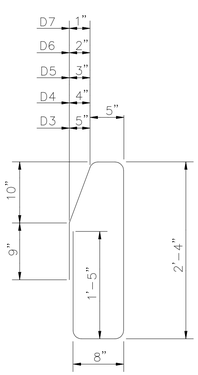

BARS D3-D7-#4

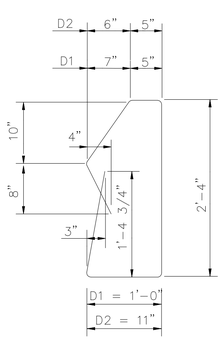

BARS D1-D2-#4

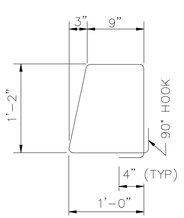

BARS S1-#4

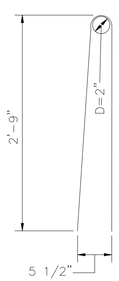

BARS R1-#4

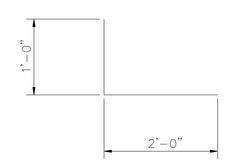

BARS E-#5

BAR BENDING DETAILS

DIMENSIONS ARE OUT TO OUT

GENERAL NOTES

SPECIFICATIONS: ALABAMA DEPARTMENT OF TRANSPORTATION STANDARD SPECIFICATIONS FOR HIGHWAYS AND BRIDGES, CURRENT.

PRECAST BARRIER RAIL UNITS: PRECAST BARRIER RAIL UNITS SHALL CONFORM TO SECTION 512 OF THE STANDARD SPECIFICATIONS. BARS TYPE L SHALL BE GRADE 60 STEEL.

DESIGN LOADING: AASHTO HS 20-44

SURFACE FINISH: EXPOSED SURFACES OF THE PRECAST BARRIER RAIL UNITS SHALL RECEIVE A CLASS 3 SURFACE FINISH IN ACCORDANCE WITH THE PROVISIONS OF ITEM 501.03(L)4.

THESE DRAWINGS REPRESENT DESIGNS PREPARED FOR USE BY THE ALABAMA DEPARTMENT OF TRANSPORTATION; AND ARE NOT TO BE COPIED, REPRODUCED, ALTERED, OR USED BY ANYONE, OR ANY ORGANIZATION, WITHOUT THE EXPRESSED WRITTEN CONSENT OF THE ALABAMA DEPARTMENT OF TRANSPORTATION REPRESENTATIVE AUTHORIZED TO APPROVE SUCH USE. ANYONE MAKING UNAUTHORIZED USE OF THESE DRAWINGS MAY BE PROSECUTED TO THE FULLEST EXTENT OF THE LAW.

DESIGN SECTION SUPERVISOR

ASSISTANT BRIDGE ENGINEER

BRIDGE ENGINEER

ALABAMA DEPARTMENT OF TRANSPORTATION

THIS STANDARD TO BE USED WTH ANY OF THE FOLLOWING STANDARDS

REVISIONS

STANDARD

PRECAST BARRIER RAIL FOR USE WITH PRECAST SLAB STANDARD PC-24

CHECKED BY:	DRAWN BY:	ESTIMATED QUANTITIES
		COMPUTED BY:
		VERIFIED BY:
		DESIGNED BY:
DATE CHECKED:	DATE DRAWN:	SCALE:

STANDARD DWG. NO.

PCBR-1(24)

SHEET NO. 1 OF 1

U:\Standards\Precast\uscust2007 Book\PCBR1_24.dgn
Plotted: 07-Dec-2006 10:49 AM

REFERENCE PROJECT NUMBER	FISCAL YEAR	SHEET NUMBER

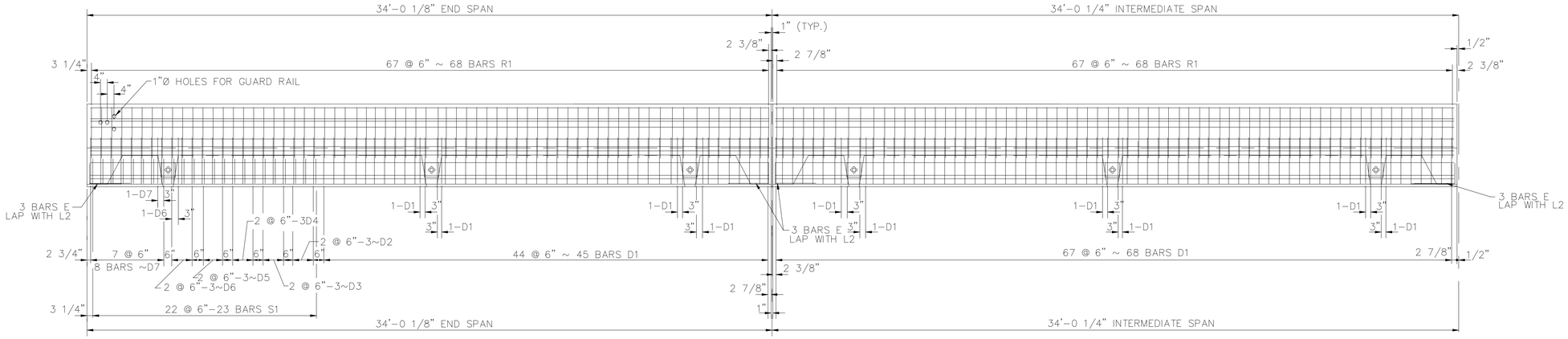

END SPAN — ELEVATION — INTERMEDIATE SPAN

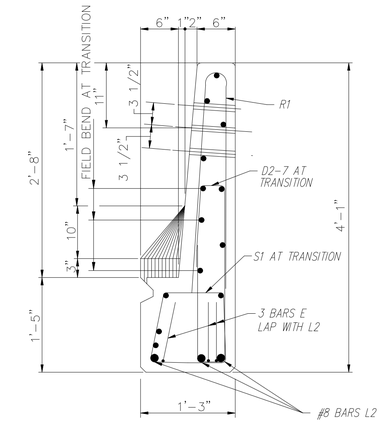

END ELEVATION

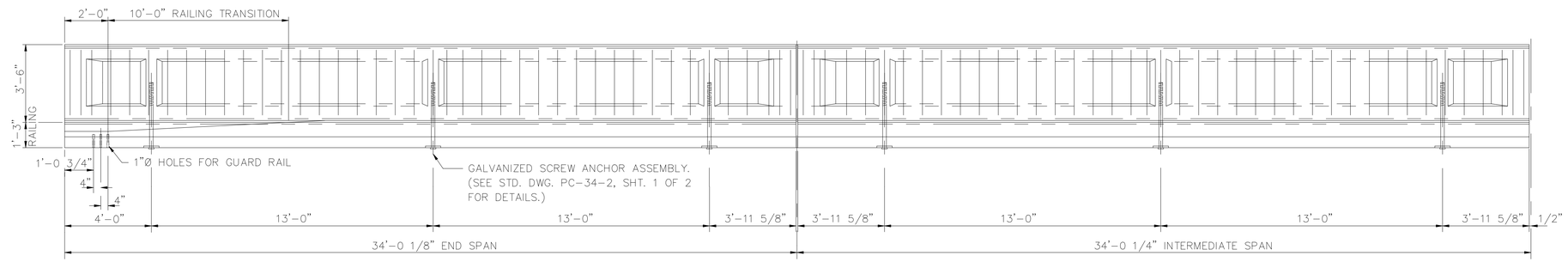

END SPAN — PLAN — INTERMEDIATE SPAN

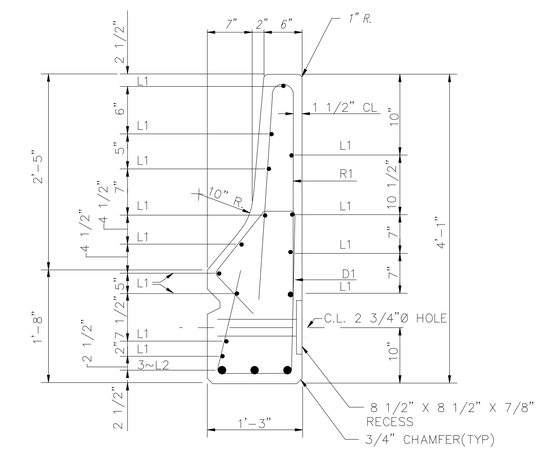

TYPICAL SECTION

L1 BARS-#4
L2 BARS-#8

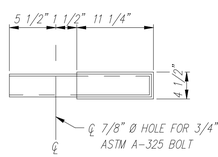

TOP

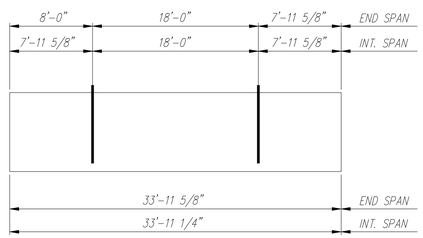

PICKUP POINTS

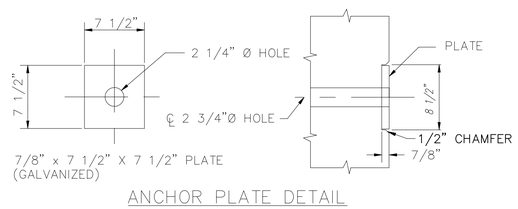

ANCHOR PLATE DETAIL

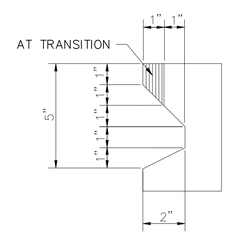

KEYWAY DETAIL

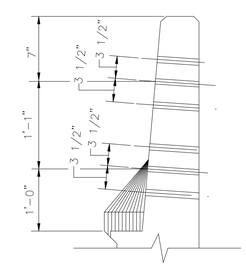

GUARD RAIL ATTACHMENT FOR TYPE 13 ANCHOR

SEE END ELEVATION THIS SH. FOR DETAILS & DIMENSIONS NOT SHOWN.

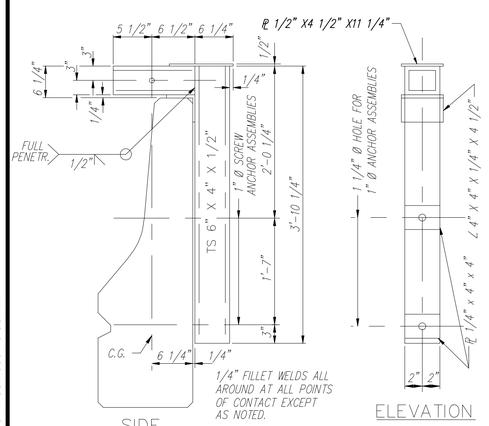

SIDE — ELEVATION

HANDLING DEVICE

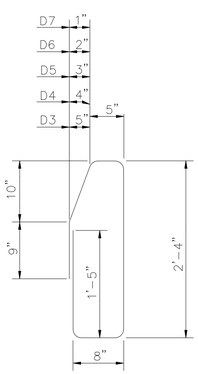

BARS D3-D7-#4

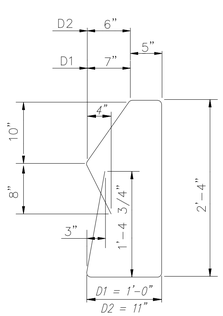

BARS D1-D2-#4

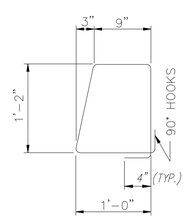

BARS S1-#4

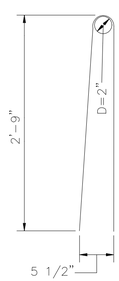

BARS R1-#4

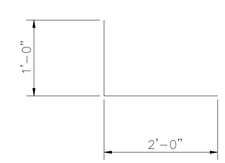

BARS E-#5

BAR BENDING DETAILS

DIMENSIONS ARE OUT TO OUT

GENERAL NOTES

SPECIFICATIONS: ALABAMA DEPARTMENT OF TRANSPORTATION STANDARD SPECIFICATIONS FOR HIGHWAYS AND BRIDGES; CURRENT.

PRECAST BARRIER RAIL UNITS: PRECAST BARRIER RAIL UNITS SHALL CONFORM TO SECTION 512 OF THE STANDARD SPECIFICATIONS. BARS TYPE L SHALL BE GRADE 60 STEEL.

DESIGN LOADING: AASHTO HS 20-44

SURFACE FINISH: EXPOSED SURFACES OF THE PRECAST BARRIER RAIL UNITS SHALL RECEIVE A CLASS 3 SURFACE FINISH IN ACCORDANCE WITH THE PROVISIONS OF ITEM 501.03(L)4.

THESE DRAWINGS REPRESENT DESIGNS PREPARED FOR USE BY THE ALABAMA DEPARTMENT OF TRANSPORTATION; AND ARE NOT TO BE COPIED, REPRODUCED, ALTERED, OR USED BY ANYONE, OR ANY ORGANIZATION, WITHOUT THE EXPRESSED WRITTEN CONSENT OF THE ALABAMA DEPARTMENT OF TRANSPORTATION REPRESENTATIVE. AUTHORIZED TO APPROVE SUCH USE. ANYONE MAKING UNAUTHORIZED USE OF THESE DRAWINGS MAY BE PROSECUTED TO THE FULLEST EXTENT OF THE LAW.

DESIGN SECTION SUPERVISOR

ASSISTANT BRIDGE ENGINEER

BRIDGE ENGINEER

ALABAMA DEPARTMENT OF TRANSPORTATION

THIS STANDARD TO BE USED WTH ANY OF THE FOLLOWING STANDARDS

REVISIONS

STANDARD

PRECAST BARRIER RAIL FOR USE WITH PRECAST SLAB STANDARD PC-34-2

		ESTIMATED QUANTITIES
		COMPUTED BY:
		VERIFIED BY:
CHECKED BY:	DRAWN BY:	DESIGNED BY:
DATE CHECKED:	DATE DRAWN:	SCALE:

STANDARD DWG. NO.

PCBR-1(34)

SHEET NO. 1 OF 1

U:\Standards\Precast\uscust\2007 Book\PCBR1_34.dgn
Plotted: 07-Dec-2006 10:50 AM

REFERENCE PROJECT NUMBER	FISCAL YEAR	SHEET NUMBER

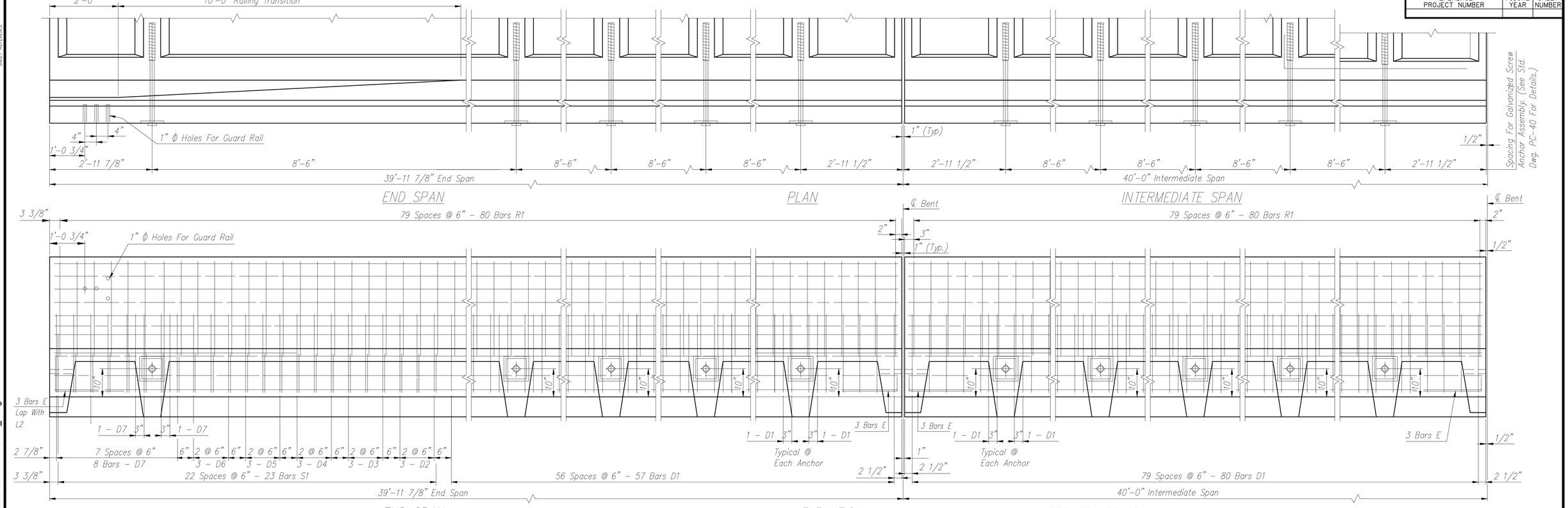

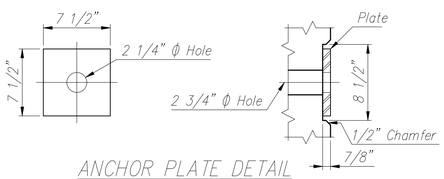

ANCHOR PLATE DETAIL
7 1/2 " x 7 1/2" x 7/8" Galvanized Plate

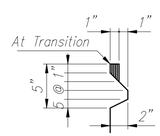

KEYWAY DETAIL

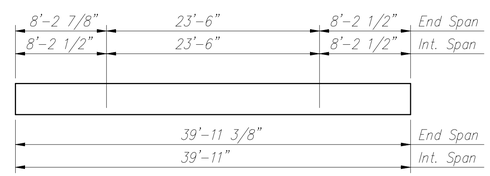

PICKUP POINTS

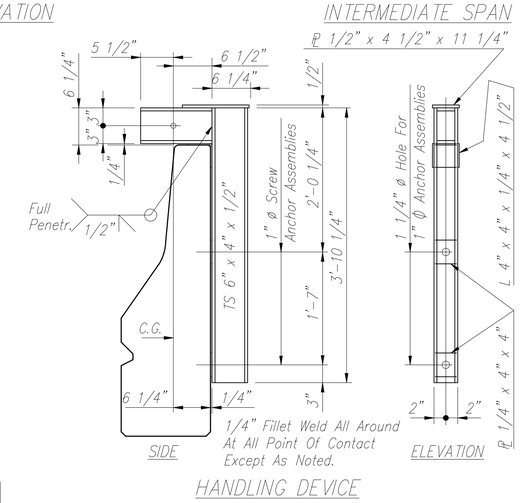

HANDLING DEVICE

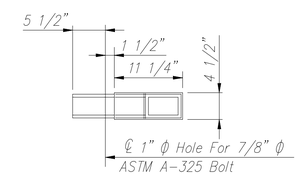

TOP

GENERAL NOTES:

SPECIFICATIONS: State Of Alabama Standard Specifications For Highways And Bridges; Current.

PRECAST BARRIER RAIL UNITS: Precast Barrier Rail Units Shall Conform To Section 512 Of The Standard Specifications. Bars Type L Shall Be Grade 60 Steel.

DESIGN LOADING: AASHTO HS20-44

SURFACE FINISH: Exposed Surfaces Of The Precast Barrier Rail Units Shall Receive A Class 3 Surface Finish In Accordance With The Provisions Of Item 501.03(L)4.

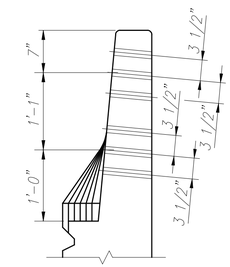

GUARD RAIL ATTACHMENT FOR TYPE 13 ANCHOR
See End Elevation This Sheet For Details And Dimensions Not Shown.

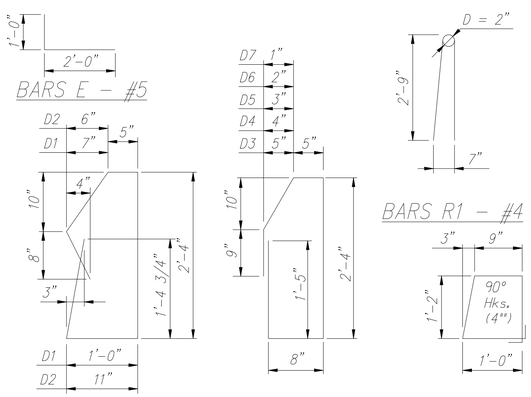

BARS D1 & D2 - #4 BARS D3-D7 - #4 BARS R1 - #4 BARS S1 - #4

BAR BENDING DETAILS
Dimensions Are Out To Out.

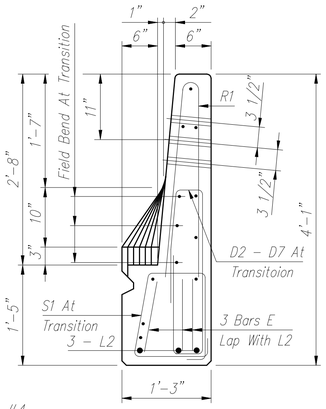

END ELEVATION
(Showing Single Rail Attachment)

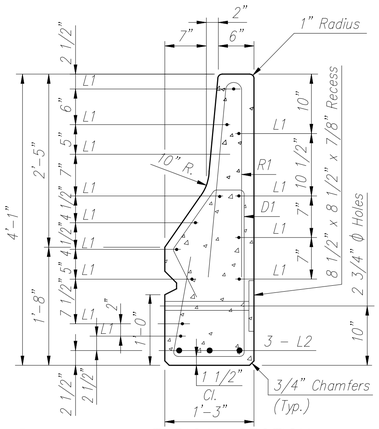

L1 Bars - #4
L2 Bars - #9

TYPICAL SECTION
Showing Bar Reinforcing

THESE DRAWINGS REPRESENT DESIGNS PREPARED FOR USE BY THE ALABAMA DEPARTMENT OF TRANSPORTATION; AND ARE NOT TO BE COPIED, REPRODUCED, ALTERED, OR USED BY ANYONE, OR ANY ORGANIZATION, WITHOUT THE EXPRESSED WRITTEN CONSENT OF THE ALABAMA DEPARTMENT OF TRANSPORTATION REPRESENTATIVE AUTHORIZED TO APPROVE SUCH USE. ANYONE MAKING UNAUTHORIZED USE OF THESE DRAWINGS MAY BE PROSECUTED TO THE FULLEST EXTENT OF THE LAW.

DESIGN SECTION SUPERVISOR

ASSISTANT BRIDGE ENGINEER

BRIDGE ENGINEER

ALABAMA DEPARTMENT OF TRANSPORTATION

THIS STANDARD TO BE USED WTH ANY OF THE FOLLOWING STANDARDS

REVISIONS

STANDARD

40 FT. PRECAST CONCRETE SOLID TYPE BARRIER RAIL

CHECKED BY:	DRAWN BY:	ESTIMATED QUANTITIES
DATE CHECKED:	DATE DRAWN:	COMPUTED BY:
		VERIFIED BY:
		DESIGNED BY:
		SCALE:

STANDARD DWG. NO.

PCBR-1(40)

SHEET NO. 1 OF 1

U:\Standards\Precast\uscust2007 Book\PCBR1_40.dgn

Plotted: 07-Dec-2006 10:50 AM