SUMMARY OF GENERAL REQUIREMENTS FOR EROSION AND SEDIMENT CONTROL ON ALDOT CONSTRUCTION PROJECTS

Summary of General Requirements for Erosion and Sediment Control on ALDOT Construction Projects

Effective July 22, 2008

Erosion and sediment control practices required on ALDOT construction projects can be found in a number of contract and internal policy documents. The purpose of this document is to summarize these practices for information and reference for those external to ALDOT. More specific information can be made available upon request. This document consists of five areas of control which ALDOT deems vital to the protection of water quality during road and bridge construction. How ALDOT strives to control communication, work, water, erosion and sediment is described below.

Control the Communication -

- Internal communication of priorities and expectations is facilitated through frequent meetings at the leadership through field personnel levels.
- All construction personnel from division engineers to project inspectors are required to become certified and maintain certification as Qualified Credentialed Inspectors (QCIs). The Alabama Department of Environmental Management (ADEM) defines the requirements of QCI training and certification. ALDOT is one of three ADEM recognized QCI training providers. ALDOT recertifies approximately 1100 - 1300 employees annually through its four hour QCI training program.
- Field personnel are expected to address 100% of all known environmental concerns. Internal communication of concerns is a priority stressed in training and internal meetings.
- Preliminary ALDOT/contractor communication is facilitated through required pre bid and preconstruction conferences, onsite stormwater meetings and submittal and review of contractor stormwater management plans (template attached).
- Weekly contractor communication is encouraged through required joint stormwater inspections.
- Inspection results are reported in the ALDOT Stormwater Permit Tracking System. Reports citing deficiencies are automatically emailed to appropriate ADEM offices as well as to ALDOT central and division office personnel for information and to encourage accountability.
- Special contractor liaison, regulatory agency and public community meetings are held frequently to promote perspective sharing among all stakeholders.

Control the Work –

- A required Stormwater Management Plan (SWMP) is submitted by the contractor for approval by the engineer. The intent of the requirement is to evaluate proposed water quality protection efforts prior to ground disturbance.
- Disturbance is delayed and limited by restricting cleared areas to no more than 17 acres at any given time without prior approval. Consideration for increasing this limit is given upon written request and presentation of an acceptable justification for the increase.

- Grading operations commence as soon as possible after the beginning of the clearing and grubbing operations and the continuous pursuit of permanent stabilization is required.
- Final grading and permanent stabilization is initiated within 48 hours of reaching sub-grade.
- Cut sections require permanent stabilization in 20' increments as excavation progresses.
- Temporary soil erosion and sediment control BMP's are installed in coordination with permanent erosion control features to assure effective continuous control of erosion.
- The frequency and detail of inspection reporting exceeds regulatory requirements.
- Daily inspection is performed by both the contractor QCI and ALDOT QCI.
- A joint documented inspection is performed weekly and after qualifying rainfall events (3/4" in 24 hours).
- Any discoloration of stormwater runoff or change in the color of receiving waters flowing through the site are reported as a sediment loss.
- Discovered deficiencies are reported immediately and corrected as soon as practicable.
- Drainage structures are backfilled and inlet and outlet protection installed as soon as practicable after completion of the structure.

Control the Water –

- Raindrop impact is attenuated by temporary and permanent ground cover.
- Runoff is captured, slowed and diverted by use of ditch checks and sediment barriers, berms, swales and slope drains.
- The contractor is responsible for protecting water quality when diversion is required for operations in or near waters of the state and during dewatering operations.
- Contractor innovation during water handling is encouraged through contract language and administration to protect water quality.
- Provisions are made so that the quality of waters originating off of the right of way and entering the project site shall not be diminished as they flow through and leave the site.

Control the Erosion –

- Clearing is limited and delayed as described above. After clearing, final required stabilization must be installed or applied and sediment be controlled to maximum extent practicable in order to be considered stabilized and no longer erodible.
- Temporary Erosion Control
    - Temporary ground cover and surface stabilization are achieved by the use of temporary seeding and mulching, polyethylene, stabilized construction entrances, dust control, and slope tracking.
    - All areas of the project not undergoing active construction are inspected a minimum of every 7 calendar days. At locations where final grading should

be completed within 60 calendar days, all bare ground is stabilized with temporary mulching. At locations where final grading will not be completed within 60 calendar days all bare ground is stabilized with temporary seeding and mulching.

- Permanent Erosion Control
    - After clearing, permanent stabilization is pursued continuously.
    - Permanent stabilization of slopes may consist of vegetation, vegetation reinforced with rolled erosion control product, aggregate slope protection, riprap or concrete slope paving.
    - Permanent stabilization of ditch linings may consist of vegetation, vegetation reinforced with rolled erosion control product, riprap or concrete ditch paving.
    - Permanent Stabilization at drainage structure outlets is achieved through concrete stilling basins, riprap energy basins and riprap or concrete aprons.

Control the Sediment –

- After communication, work, water, and erosion are controlled remaining transient sediment is controlled. Sediment is controlled with the use of sediment barriers, ditch checks, inlet protection, drainage sumps and sediment basins.
- Sediment barriers may consist of soil, brush, sand bags, hay bales, wattles, silt fence, or riprap depending on field conditions.
- Ditch checks are constructed of sand bags, hay bales, wattles, silt dikes, silt fence, or riprap depending on the field conditions.
- Inlet protection may be constructed with sediment barriers, silt fence, wattles, drainage sump, coarse aggregate, and manufactured inlet protection devices.
- Upland sediment is captured prior to entering a water of the state. Instream sediment migration is controlled by the use of floating basin booms, cofferdams, sheeting/shoring and riprap when permitted.
- Captured sediment is removed and storage capacity restored when one half of the storage capacity is filled unless conditions warrant more frequent removal.

Attachments –
ALDOT Stormwater Management Plan Template
ALDOT Erosion and Sediment Control Special Drawings

ALDOT Stormwater Management Plan (SWMP) Template Instructions

This template was created to assist ALDOT and its contractors in the creation of complete and uniform stormwater management plans in accordance with specification requirements. This plan should be completed prior to the preconstruction conference and may be printed and mailed or mailed electronically to the Division Stormwater Coordinator or to the County Engineer for County projects. Some text has been pre-entered to make the document and submittal less time consuming. If the pre-entered text is not appropriate for the work for which it is being submitted, the text should be modified or deleted as necessary. When completed, this document should read as if it were created for the specific project shown on the title page and should be as accurate as possible in regards to how requirements of contract documents regarding water quality protection requirements will be met.

Reference specifically 108.04(b)3. and generally specification sections 107, 108, and 665 while creating the plan.

All gray boxes in the template require action. The action may be the input of data, deletion of the box (by pressing space bar) or the deletion of pre entered text.

Tab to progress through boxes or click inside a box for editing.

Section IX is included for ALDOT use and completion. It will become a part of the accepted plan after ALDOT review. Copies of the accepted and completed plan will be returned to the contractor and provided to project inspection personnel for reference while constructing the project. Work should not commence prior to the required onsite stormwater meeting or prior to Section IX being completed by ALDOT or by the County Engineer.

A completed SWMP is required for ALL projects regardless of type of work, funding or regulatory permitting. A current version of this template is required to be used to create the SWMP. Submitted SWMPs will not be considered complete if this template has been modified.

Questions regarding the template may be directed to the Division Stormwater Coordinator or to Barry Fagan at faganb@dot.state.al.us.

STORMWATER MANAGEMENT PLAN

FOR ALDOT PROJECT NUMBER

Triple click to enter Project Number, tab to next field.
Enter County
Enter Project Description as Shown on the Contract

CREATED FOR

Enter the Name of the Prime Contractor

CREATED BY

Enter Preparer
Enter Preparer's Company
Enter Preparer's Telephone
Enter Preparer's email. Hit space bar if not available

Enter Date Created

CONTENTS

I. Introduction.
II. Stormwater Personnel and Equipment.
III. Operations.
- **a. Clearing and Grubbing.**
- **b. Excavation/Embankment.**
- **c. Drainage.**
- **d. Bridges.**

IV. Temporary Encroachments into Stream, Water Bodies and Wetlands.
V. Onsite Fuel Tanks.
VI. Offsite Areas.
VII. Requested Modifications to Contract Requirements.
VIII. Onsite Stormwater Meeting.
IX. Attachments.
X. ALDOT Acceptance and Exceptions.

I. INTRODUCTION.

The purpose of this plan is to ensure that construction erosion and sediment control issues are realized and managed by both the ALDOT and the Contractor at the earliest possible date. This plan will be used in conjunction with requirements set forth in contract documents for this project and should be considered an implementation plan for these requirements.

The nature of road and bridge construction requires that in order to successfully control erosion and sediment, both the Contractor and ALDOT be flexible in the implementation of this plan and flexible in the implementation of Best Management Practices (BMPs). BMPs will be implemented at locations and during stages of construction when they will be effective and are applicable with concurrence of the Engineer. It is understood that the definition of Best Management Practices includes any action taken by the Contractor or by ALDOT to protect water quality and/or private property.

Certain operations as listed in the contents above may not be a part of this contract. This has been made clear under the appropriate section.

The creation and submission of this document is evidence that the Prime Contractor for the project has read the document, is aware of specification requirements regarding water quality protection and agrees to implement this plan for the life of the project. It is understood that if the plan is found to be satisfactory, the plan will not be approved by The Engineer, but will be accepted as complete with or without exceptions.

II. STORMWATER PERSONNEL AND EQUIPMENT.

The Qualified Credentialed Inspector chosen to represent our company for this project has a valid QCI certification, has full authority to implement this plan and will fulfill the obligations and requirements of Subarticle 665.03(d). Obligations include independent daily inspections as well as accompanying ALDOT inspectors on required weekly and rainfall inspections. The name and credentials of this person are listed below.

Primary QCI	**Enter the Name of the Primary QCI**
QCI Number	**Enter the QCI Number**
QCI Expiration	**Enter QCI expiration date.**
Contact Info.	**Office Phone**
	Mobile Phone
	SouthernLinc Radio. Space bar, tab if no radio

Secondary QCI	**Not Applicable (If no secondaryexists)**
QCI Number	**Space bar, tab if no secondary.**
QCI Expiration	**Space bar, tab if no secondary.**
Contact Info.	**Space bar, tab if no secondary.**
	Space bar, tab if no secondary.
	Space bar, tab if no secondary.

The Primary QCI shown above **is** an employee of the Prime Contractor. **(if the Primary QCI is not an employee of the Prime contractor, explain and make request here. Otherwise, clear with space bar.)**

III. OPERATIONS.

a. **Clearing and Grubbing.**
The implementation of best management practices for protecting water quality shall commence prior to initial clearing and grubbing operations. Clearing and grubbing operations should immediately precede any required grading operations and in accordance with Section 201. **This project does not require Clearing and Grubbing work. (or provide operation sequences and details and any requests to increase the 17 ac clearing limit)**

b. **Excavation and Embankment.**
Excavation and Embankment work is governed by Section 210 which includes requirements for vertical grading increments and the establishment of permanent vegetation. **This project does not require Excavation/ Embankment work (or) provide grading sequences and details including provisions for the establsihment of permanent grassing not covered under c. below.**

c. **Vegetation.**
The continuous pursuit of established permanent vegetation is one of the best erosion control BMPs available to ALDOT contractors. Where permanent vegetation cannot be established, temporary seeding and temporary mulch are available for erosion control. Any area not under active construction will not remain without stabilization for more than 7 days. **Vegetation requirements will be met by our company (or provide name of subcontractor).**

d. **Other BMPs.**
Water quality protection is required and may be achieved through erosion control, sediment control or a combination of both. BMP installation and maintenance is a continuous process, requires daily inspection and may require immediate action when unsatisfactory conditions exist. **The establishment and maintenance of other BMPs will be handled by our company (or provide name of subcontractor). Below is a list of personnel and equipment that is dedicated to the implementation and maintenance of BMPs on this project.**

e. **Drainage.**
Facilitating the passage of water through the project by temporary or permanent means without diminishing it's quality is required by specifications and is a recognized BMP for protecting water quality. The completion of drainage structures should be continuously pursued through backfill and permanent stabilization. This includes completion of inlet and outlet protection. **This project does not require drainage work.**

f. **Bridge Construction.**

Bridge work should be completed in a manner that promotes pursued continuous construction until foundation and substructure work no longer pose a threat to water quality.

IV. TEMPORARY ENCROACHEMENTS INTO STREAMS, WATER BODIES AND WETLANDS.

A request for temporary encroachments into streams, water bodies and wetlands is required to be submitted to the Engineer for all temporary stream crossings, temporary water diversions as well as temporary work bridges and platforms. Required components of the request are listed in Section 107. **We will not require any encroachment into a stream, water body or wetland for the construction of this project. (or) A request completed in accordance with Section 107 of the specifications and specific to this project is attached for your review.**

V. ONSITE FUEL TANKS.

A request for placing fuel tanks within ALDOT ROW along with an acceptable SPCC Plan similar to the example provided on ADEM's website is required to be submitted to the Engineer prior to placing any stationary fuel tank on ALDOT ROW. **We will not require an onsite fuel tank for the project at this time. (or) An SPCC Plan specific for this project and developed by a licensed professional engineer is attached for your review.**

VI. OFFSITE AREAS.

All requirements of Section 106 including the submittal of Notice of Registration Received from ADEM must be met for all offsite material sources and waste areas. **We will not require any offsite areas for securing or wasting material associated with this project. (or) A notice of ADEM receipt is attached showing current NPDES Permit registration for all off site areas as well as other documents required in Section 106 of the specifications.**

VII. REQUESTED MODIFICATIONS TO THE CONTRACT DOCUMENTS.

We understand that specific BMPs have been included in the contract and that ALDOT designers have determined to be sufficient for controlling erosion and sediment. This contract was entered into with full knowledge of tools available for the protection of water quality. The contract may or may not be modified to meet our requests. **We do not request any modifications to the contract documents at this time. (or list all requests)**

VIII. ONSITE STORMWATER MEETING.

Prior to beginning work we will participate in an Onsite Stormwater Meeting as required by Subarticle 665.03(e). All subcontractors that may have an impact on stormwater management will be invited to this meeting. We would like to schedule the meeting for the location, date and time shown below.

Location	**Enter a specific meeting location**
Date	**Enter a meeting date**
Time	**Enter a meeting time**

IX. Attachments.

There are no attachments to this plan. (or list all attachments)

X. Engineer's Conditions of Acceptance.

This Section is for The Engineer's use and will become a part of the plan when the plan is accepted as complete. Copies of the completed and accepted plan will be returned to the contractor and to the Project Office for reference and guidance during construction. SWMPs for County Projects may or may not be reviewed by ALDOT Division personnel.

This Stormwater Management Plan has been reviewed and accepted subject to the following conditions and/or exceptions.
We take no exceptions to the plan as submitted (or enter exceptions or conditions here).

_____
Division Stormwater Coordinator

and

_____
Division Construction Engineer

or

_____
County Engineer

REFERENCE PROJECT NO.	FISCAL YEAR	SHEET NO.

BEST MANAGEMENT PRACTICE (BMP)	SPECIAL DRAWING NUMBER	PLAN SYMBOL	MATERIALS REQUIREMENT REFERENCES	CONSTRUCTION REQUIREMENT REFERENCES	USAGE GUIDELINES
TEMPORARY SLOPE DRAIN PIPE WITH ROCK DITCH CHECK AND SUMP EXCAVATION	ESC-200 (SHT. 2 OF 4)	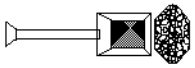	665.02, 801, 814	665.03, 665.04, 665.05	A TEMPORARY SLOPE DRAIN WITH RIPRAP DITCH CHECK AND SUMP EXCAVATION IS CONSTRUCTED WITH A FLEXIBLE PIPE OR CONDUIT EXTENDING FROM THE TOP OF A CUT OR FILL SLOPE INTO AN EXCAVATED SEDIMENT TRAPPING SUMP WITH A ROCK DITCH CHECK DOWN SLOPE OF THE SUMP. THE PURPOSE OF THE TEMPORARY SLOPE DRAIN IS TO CONVEY STORMWATER RUNOFF DOWN THE FACE OF THE SLOPE WITHOUT CAUSING EROSION ON THE SLOPE.
TEMPORARY EARTH BERM	ESC-200 (SHT. 2 OF 4)	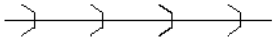	665.02	665.03, 665.04, 665.05	A TEMPORARY EARTH BERM CONSISTS OF A CHANNEL CONSTRUCTED ACROSS A SLOPE AND BACKED ON THE LOWER SIDE BY AN EARTHEN RIDGE. THE TEMPORARY EARTH BERM IS USED TO REDUCE SLOPE LENGTH AND DIVERT RUNOFF TO STABILIZED OUTLETS SUCH AS A TEMPORARY SLOPE DRAIN PIPE.
BRUSH BARRIER	ESC-200 (SHT. 3 OF 4)	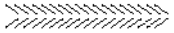	665.02	665.03, 665.04, 665.05	BRUSH BARRIERS ARE TEMPORARY SEDIMENT TRAPPING STRUCTURES CONSTRUCTED AT THE PERIMETER OF DISTURBED AREAS THAT ARE MADE FROM RESIDUE OF LAND CLEARING AND GRUBBING. BRUSH BARRIERS CONTROL OFF SITE TRANSPORT OF SEDIMENTS UNTIL STABILIZATION OF DISTURBED AREAS CAN BE ACHIEVED.
SILT FENCE SEDIMENT BARRIER	ESC-200 (SHT. 4 OF 4)	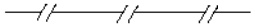	665.02, AASHTO M288	665.03, 665.04, 665.05	A SILT FENCE SEDIMENT BARRIER CONSIST OF AN ENTRENCHED FILTER FABRIC STRETCHED ACROSS A WIRE BACKING THAT IS SUPPORTED BY POSTS. THE PURPOSE OF SILT FENCE SEDIMENT BARRIERS IS TO INTERCEPT AND TRAP SEDIMENT AS WELL AS DECREASE RUNOFF VELOCITIES OF SHEET FLOW AND MODERATE CHANNEL FLOWS.
DITCH CHECK STRUCTURES	ESC-300 (SHT. 1 OF 7)	SEE SYMBOLS BELOW FOR EACH CHECK STRUCTURE	665.02	665.03, 665.04, 665.05	DITCH CHECKS ARE INSTALLED TO CONTROL RUNOFF VELOCITY AND THUS REDUCE EROSION AND PROVIDE FOR TRAPPING OF SEDIMENTS. SELECTION OF THE APPROPRIATE DITCH CHECK IS A FUNCTION OF DRAINAGE AREA, DITCH GRADIENT AND SOIL TYPE.
HAY BALE DITCH CHECK	ESC-300 (SHT. 2 OF 7)		665.02	665.03, 665.04, 665.05	HAY BALES ARE USED TO INTERCEPT LOW VOLUME FLOWS IN LOW TO MODERATE GRADIENT DITCHES.
SILT FENCE DITCH CHECK	ESC-300 (SHT. 2 OF 7)		665.02, AASHTO M288	665.03, 665.04, 665.05	SILT FENCE DITCH CHECKS ARE USED TO INTERCEPT LOW VOLUME FLOWS IN LOW TO MODERATE GRADIENT DITCHES.
SAND BAG DITCH CHECK	ESC-300 (SHT. 3 OF 7)	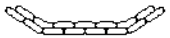	665.02, 801	665.03, 665.04, 665.05	SAND BAG DITCH CHECKS ARE USED FOR VELOCITY REDUCTION AND MINIMAL SEDIMENT TRAPPING IN CONCRETE PAVED DITCHES OR IN DITCHES THAT HAVE ROCKY BOTTOMS. SAND BAGS MAY ALSO BE USED AS A SEDIMENT BARRIER ON HARD SURFACES.
WATTLE DITCH CHECK	ESC-300 (SHT. 4 OF 7)		665.02, ALDOT LIST II-24, MANUFACTURER LITERATURE	665.03, 665.04, 665.05, MANUFACTURER LITERATURE	WATTLE DITCH CHECKS ARE APPROPRIATE FOR VELOCITY REDUCTION AND CONTROL OF SEDIMENT TRANSPORT UNDER LOW TO MEDIUM FLOW CONDITIONS.
SILT DIKE DITCH CHECK	ESC-300 (SHT. 5 OF 7)	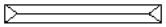	665.02, MANUFACTURER LITERATURE	665.03, 665.04, 665.05, MANUFACTURER LITERATURE	SILT DIKE DITCH CHECKS CAN BE USED IN DITCHES WITH CONCENTRATED FLOWS WITHIN THE CLEAR ZONE WHERE RIPRAP CAN NOT BE USED.
ROCK DITCH CHECK	ESC-300 (SHT. 6 OF 7)		665.02, 801, 814, PLAN NOTE	665.03, 665.04, 665.05	ROCK DITCH CHECKS ARE USED PRIMARILY IN HIGH VELOCITY AND LARGE VOLUME DITCH FLOW CONDITIONS TO REDUCE EROSION AND TRAP MINIMAL VOLUMES OF SEDIMENT. AGGREGATE DITCH CHECKS CAN BE USED ONLY IN LOW VELOCITY FLOWS AND SERVE AS EFFECTIVE SEDIMENT TRAPS. SIZES OF ROCK WILL BE DESIGNATED ON THE PLANS.
ROCK DITCH CHECK WITH SUMP EXCAVATION	ESC-300 (SHT. 7 OF 7)	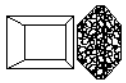	665.02, 801, 814, PLAN NOTE	665.03, 665.04, 665.05	ROCK DITCH CHECK WITH SUMP EXCAVATION CAN BE PLACED IN DITCHES TO ASSURE ON-SITE SEDIMENT TRAPPING REQUIREMENTS ARE MET.

--SPECIFICATIONS--
CURRENT ALABAMA DEPARTMENT OF TRANSPORTATION

THIS DRAWING REPRESENTS DESIGNS PREPARED FOR USE BY THE ALABAMA DEPARTMENT OF TRANSPORTATION AND IS NOT TO BE COPIED, REPRODUCED, ALTERED, OR USED BY ANYONE, OR ANY ORGANIZATION, WITHOUT THE EXPRESSED WRITTEN CONSENT OF THE ALABAMA DEPARTMENT OF TRANSPORTATION REPRESENTATIVE AUTHORIZED TO APPROVE THIS USE. ANYONE MAKING UNAUTHORIZED USE OF THIS DRAWING MAY BE PROSECUTED TO THE FULLEST EXTENT OF THE LAW.

REVISIONS

ALABAMA DEPARTMENT OF TRANSPORTATION
1409 COLISEUM BOULEVARD
MONTGOMERY, AL 36130-3050

DESIGN BUREAU SPECIAL DRAWING

BEST MANAGEMENT PRACTICE REFERENCE MATRIX

DRAWN BY _____
DATE DRAWN 2006

SPECIAL DRAWING NO. ESC-100 (SHEET 1 OF 2)

INDEX NO. 1160

REFERENCE PROJECT NO.	FISCAL YEAR	SHEET NO.

BEST MANAGEMENT PRACTICE (BMP)	SPECIAL DRAWING NUMBER	PLAN SYMBOL	MATERIALS REQUIREMENT REFERENCES	CONSTRUCTION REQUIREMENT REFERENCES	USAGE GUIDELINES
INLET PROTECTION	ESC-400 (SHT. 1 OF 5)		665.02	665.03, 665.04, 665.05	CONFIGURATIONS MAY BE ADJUSTED WITH APPROVAL OF THE ENGINEER FOR TRAVELWAY SAFETY, WATER FLOW, SOIL OR INSTALLATION CHALLENGES.
AGGREGATE INLET PROTECTION	ESC-400 (SHT. 2 OF 5)	*	665.02, 801	665.03, 665.04, 665.05	THE ELEVATION OF THE TOP OF THE REQUIRED STONE BERM SHALL BE A MINIMUM OF 1.5 FEET ABOVE THE ELEVATION OF THE INLET WORKING POINT AND A MINIMUM OF 6 INCHES BELOW THE ELEVATION OF THE OUTSIDE EDGE OF THE INSIDE SHOULDER.
WATTLE INLET PROTECTION	ESC-400 (SHT. 3 OF 5)	*	665.02, ALDOT LIST II-24, MANUFACTURER LITERATURE	665.03, 665.04, 665.05, MANUFACTURER LITERATURE	WATTLE INLET PROTECTION PROVIDES SEDIMENT TRAPPING BY PONDING TO A DEPTH EQUAL TO OR LESS THAN THE WATTLE DIAMETER.
MANUFACTURED INLET PROTECTION DEVICE	ESC-400 (SHT. 4 OF 5)	*	665.02, MANUFACTURER LITERATURE	665.03, 665.04, 665.05, MANUFACTURER LITERATURE	FRAMES WITH EITHER SQUARE OR CIRCULAR BASES MAY BE USED. FRAME BASE SHOULD BE SELECTED TO PROVIDE BEST SEAL AROUND INLET AS DIRECTED BY THE ENGINEER.
SAND BAG INLET PROTECTION	ESC-400 (SHT. 5 OF 5)	*	665.02, 801	665.03, 665.04, 665.05	SEDIMENT SHOULD BE CONTROLLED PRIOR TO ENTERING GUTTER. GUTTER CHECKS AND INLET PROTECTION ARE FOR SECONDARY CONTROL.
FLOATING BASIN BOOM	ESC-501		665.02, MANUFACTURER LITERATURE	665.03, 665.04, 665.05, MANUFACTURER LITERATURE	A FLOATING BASIN BOOM IS A FLOATING IMPERMEABLE TEXTILE BARRIER WHICH MINIMIZES SEDIMENT TRANSPORT WITHIN A WATERBODY AND MAY BE USED FOR UPLAND SEDIMENT CONTROL REDUNDANCY.
STABILIZED CONSTRUCTION ENTRANCE	ESC-502	SCE	665.02, 801	665.03, 665.04, 665.05	STABILIZED CONSTRUCTION ENTRANCES ARE INSTALLED AT POINTS OF VEHICULAR INGRESS AND EGRESS. THE STABILIZED CONSTRUCTION ENTRANCES REDUCE THE AMOUNT OF SEDIMENT TRANSPORTED ONTO PAVED PUBLIC TRAVEL WAYS BY CONSTRUCTION EQUIPMENT AND OTHER MOTOR VEHICLES.
TEMPORARY DEWATERING STRUCTURE	ESC-503	**	107.13, CONTRACTOR DISCRETION	107.13, 524.03	TEMPORARY DEWATERING STRUCTURES ARE USED TO CAPTURE SEDIMENT THAT MAY BE PRESENT IN DEWATERING DISCHARGES AND TO REDUCE DISCHARGE VELOCITY SUFFICIENTLY TO PROTECT DOWN SLOPE AREAS FROM EROSION. FILTER BAGS ARE USED WHEN DISCHARGING POTENTIALLY SEDIMENT LADEN WATER TO SENSITIVE WATER BODIES OR IN URBAN AREAS.
TEMPORARY CULVERT STREAM CROSSING	ESC-504	**	107.13, CONTRACTOR DISCRETION	107.13, 107.21	A TEMPORARY STREAM CROSSING PROVIDES A MEANS FOR VEHICLES AND HEAVY EQUIPMENT TO SAFELY CROSS A WATERCOURSE WHILE MINIMIZING DAMAGE TO STREAMS AND WETLANDS. AN EXAMPLE IS PROVIDED WHICH MAY BE MODIFIED OR ADOPTED BY THE CONTRACTOR.
TEMPORARY DIVERSION CHANNELS	ESC-505	**	107.13, CONTRACTOR DISCRETION	107.13, 107.21, 524.03	TEMPORARY DIVERSION CHANNELS ARE USED TO DIVERT STREAM FLOW AROUND CONSTRUCTION WORK UNTIL PERMANENT DRAINAGE STRUCTURES ARE COMPLETED.
TEMPORARY ROLLED EROSION CONTROL PRODUCTS			659.02, 860, ALDOT LIST II-11, MANUFACTURER LITERATURE	659.03, 659.04, 659.05, MANUFACTURER LITERATURE	TEMPORARY ROLLED EROSION CONTROL PRODUCTS ARE USED TO PROTECT DISTURBED SOILS SURFACES FROM EROSION ON BOTH SLOPES AND IN CHANNELS. ROLLED EROSION CONTROL PRODUCTS ARE OFTEN USED TO CREATE CONDITIONS THAT ASSIST THE ESTABLISHMENT OF VEGETATION. LOCATIONS SHOWN ON PLANS SHOULD BE BASED ON GRADIENT, SOIL, LONGEVITY AND HYDROLOGY. TEMPORARY ROLLED EROSION CONTROL PRODUCTS WILL GENERALLY BE REQUIRED ON 2H:1V OR STEEPER SLOPE LENGTHS MORE THAN 15 FEET.

NOTE:

* 1. ONLY ONE INLET PROTECTION SYMBOL IS SHOWN ON THE PLANS. CONSTRUCTION PHASING AND SITE CONDITIONS WILL DICTATE WHICH TYPE OF INLET PROTECTION SHOULD BE INSTALLED.

NOTE:

** 1. TEMPORARY DEWATERING STRUCTURE, TEMPORARY STREAM CROSSING, AND TEMPORARY DIVERSION CHANNEL USE AND LOCATION WILL BE AT CONTRACTOR DISCRETION UNLESS SPECIFICALLY MADE A PART OF THE CONTRACT.

--SPECIFICATIONS--
CURRENT ALABAMA DEPARTMENT OF TRANSPORTATION

THIS DRAWING REPRESENTS DESIGNS PREPARED FOR USE BY THE ALABAMA DEPARTMENT OF TRANSPORTATION AND IS NOT TO BE COPIED, REPRODUCED, ALTERED, OR USED BY ANYONE, OR ANY ORGANIZATION, WITHOUT THE EXPRESSED WRITTEN CONSENT OF THE ALABAMA DEPARTMENT OF TRANSPORTATION REPRESENTATIVE AUTHORIZED TO APPROVE THIS USE. ANYONE MAKING UNAUTHORIZED USE OF THIS DRAWING MAY BE PROSECUTED TO THE FULLEST EXTENT OF THE LAW.

REVISIONS

ALABAMA DEPARTMENT OF TRANSPORTATION
1409 COLISEUM BOULEVARD
MONTGOMERY, AL 36130-3050

DESIGN BUREAU SPECIAL DRAWING

BEST MANAGEMENT PRACTICE REFERENCE MATRIX

DRAWN BY: _____
DATE DRAWN: 2006

SPECIAL DRAWING NO.: ESC-100 (SHEET 2 OF 2)

INDEX NO.: 1160-A

REFERENCE PROJECT NO.	FISCAL YEAR	SHEET NO.

NOTES:

1. "J-HOOK" CONFIGURATION SILT FENCE APPLICATIONS ARE TO BE USED IN CONJUNCTION WITH PERIMETER SILT FENCE WHEN STORMWATER RUNOFF IS IN TWO DIRECTIONS (DOWN A FILL SLOPE AND DOWN GRADIENT ALONG THE RIGHT-OF-WAY).
2. "SMILE CONFIGURATION" APPLICATIONS ARE TO BE USED AS PERIMETER SILT FENCE WHEN THERE IS ONE-DIRECTIONAL FLOW DOWN A SLOPE.
3. SAND BAGS CAN BE USED AS DIVERSION BERMS TO PREVENT SEDIMENT FROM BEING WASHED ONTO OR ACROSS HARD SURFACES, OR TO HELP SLOW SHEET FLOW VELOCITY WHEN DRAINING AWAY FROM HARD SURFACES.
4. FOR SHORTER SLOPES AND/OR SLOPES THAT ARE LESS STEEP, DIVERSION BERMS CAN BE USED TO SAFELY CONVEY STORMWATER AWAY FROM OR AROUND A DENUDED AREA. THEY CAN BE CONSTRUCTED USING A MANUFACTURED SILT DIKE OR BY CONSTRUCTING A TEMPORARY EARTH BERM AND TRENCH WITH GEOTEXTILE OR POLYETHYLENE SHEETING PROTECTION.
5. TEMPORARY DEWATERING STRUCTURES CAN BE USED DURING CULVERT CONSTRUCTION, STREAM DIVERSIONS, OR OTHER CONSTRUCTION ACTIVITIES WHERE TURBID WATERS NEED TO BE CLARIFIED BEFORE RELEASE. SEE SPECIAL DRAWING NO. ESC-503 FOR INSTALLATION DETAILS.
6. ROLLED EROSION CONTROL PRODUCTS (RECP) MAY BE USED FOR EROSION PROTECTION ON 2H:1V OR STEEPER SOIL SLOPES WITH SLOPE LENGTH MORE THAN 15 FEET OR AS CHANNEL EROSION PROTECTION WHEN DIRECTED. SEE PLANS FOR SPECIFIC REQUIREMENTS.
7. THE ABUTMENT SLOPE TOE BERM SHALL BE 18 IN. TALL. THE BERM MAY BE CONSTRUCTED WITH ROCK IN ACCORDANCE WITH REQUIREMENTS FOR ROCK DITCH CHECKS ON SP.DWG.ESC-300 OR WITH SOIL IN ACCORDANCE WITH SHEET 2 OF 4.

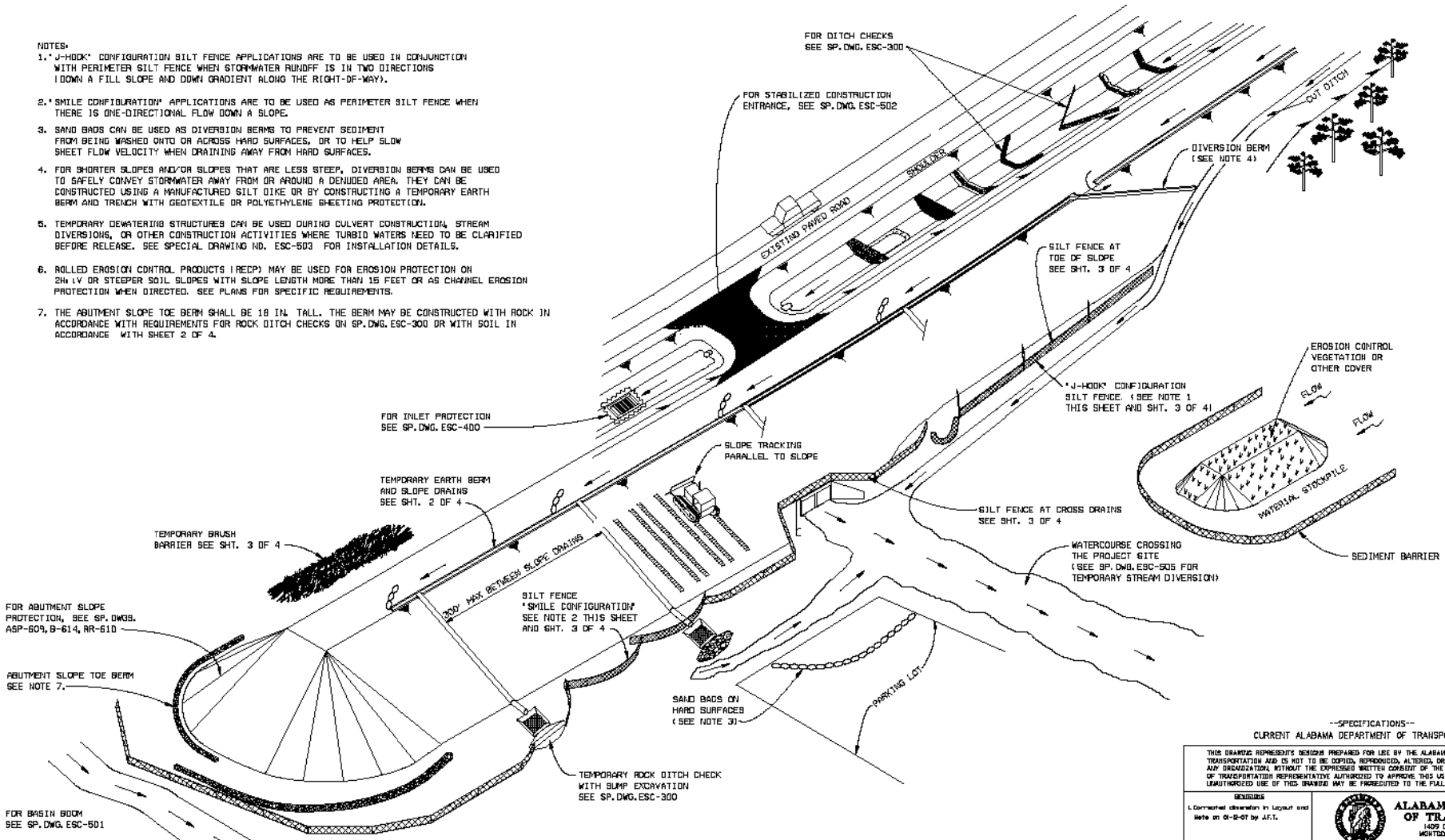

--SPECIFICATIONS--
CURRENT ALABAMA DEPARTMENT OF TRANSPORTATION

THIS DRAWING REPRESENTS DESIGNS PREPARED FOR USE BY THE ALABAMA DEPARTMENT OF TRANSPORTATION AND IS NOT TO BE COPIED, REPRODUCED, ALTERED, OR USED BY ANYONE, OR ANY ORGANIZATION, WITHOUT THE EXPRESSED WRITTEN CONSENT OF THE ALABAMA DEPARTMENT OF TRANSPORTATION REPRESENTATIVE AUTHORIZED TO APPROVE THIS USE. ANYONE MAKING UNAUTHORIZED USE OF THIS DRAWING MAY BE PROSECUTED TO THE FULLEST EXTENT OF THE LAW.

REVISIONS
1. Corrected dimension in Layout and Note on 01-12-07 by J.F.T.

ALABAMA DEPARTMENT OF TRANSPORTATION
1409 COLISEUM BOULEVARD
MONTGOMERY, AL 36130-3050

DESIGN BUREAU SPECIAL DRAWING
TYPICAL TEMPORARY EROSION/ SEDIMENT CONTROL APPLICATIONS

DRAWN BY: _____
DATE DRAWN: 2006

SPECIAL DRAWING NO.: ESC-200 (SHEET 1 OF 4)

INDEX NO.: 1161

1161_0702ef.dgn 9/14/2007 7:51:43 AM

REFERENCE PROJECT NO.	FISCAL YEAR	SHEET NO.

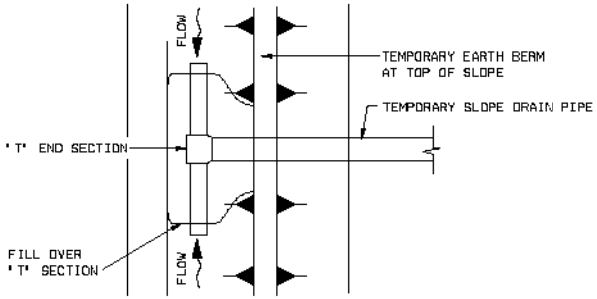

PLAN

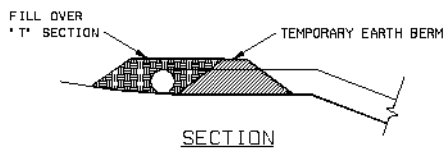

SECTION

"T" SECTION DETAIL

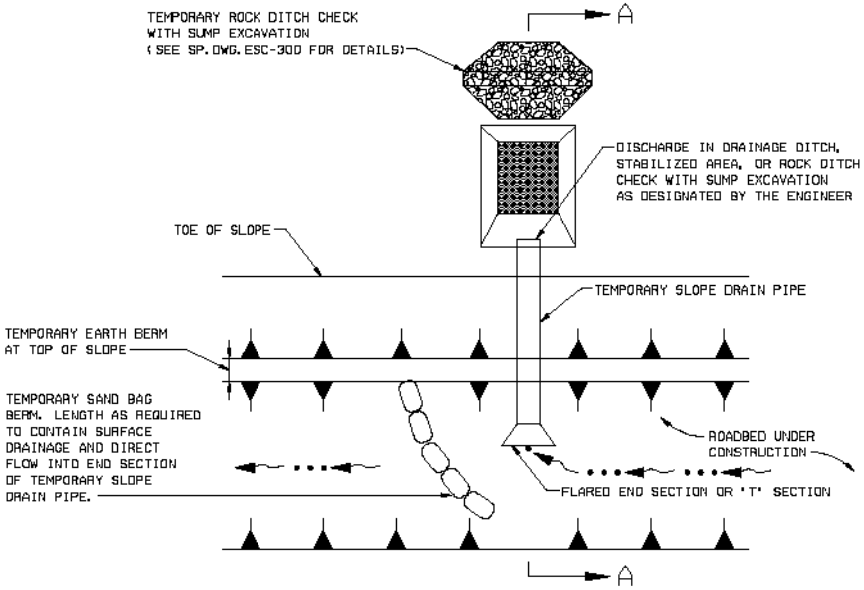

PLAN

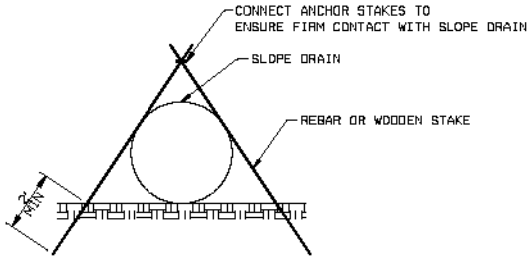

RECOMMENDED ANCHOR DETAIL

NOTE:
CONTRACTOR MAY PROPOSE ALTERNATE ANCHORING DETAIL.
ENGINEERS APPROVAL WILL BE BASED ON PERFORMANCE.

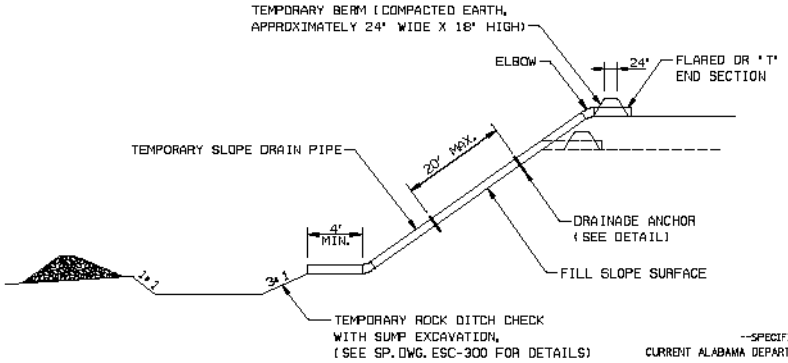

SECTION A-A

--SPECIFICATIONS--
CURRENT ALABAMA DEPARTMENT OF TRANSPORTATION

NOTES:

1. TEMPORARY SLOPE DRAINS (BERMS, DRAINS AND ROCK, IF NECESSARY) SHALL BE USED AS THE EMBANKMENT IS CONSTRUCTED. MAXIMUM SPACING OF THE DRAIN ASSEMBLY SHALL BE 300 FEET, OR AS DESIGNATED BY THE ENGINEER. THE DRAIN ASSEMBLIES SHALL BE USED UNTIL THE SLOPES ARE PROTECTED WITH PERMANENT SOIL EROSION CONTROL MEASURES.
2. TEMPORARY BERMS SHALL ALSO BE CONSTRUCTED AT THE TOP OF ALL ERODIBLE CUT SLOPES DESIGNATED OR PERMITTED BY THE ENGINEER. THE GRADIENT OF THE BERMS SHALL BE THE MINIMUM POSSIBLE THAT CONDITIONS PERMIT.
3. IN SOME CASES IT MAY BE NECESSARY TO EMBED METAL OR PLASTIC PIPE INTO THE FILL SLOPE TO ENSURE PROPER ANCHORAGE.
4. THE CONTRACTOR SHALL SELECT THE SIZE OF SLOPE DRAIN PIPE.

THIS DRAWING REPRESENTS DESIGNS PREPARED FOR USE BY THE ALABAMA DEPARTMENT OF TRANSPORTATION AND IS NOT TO BE COPIED, REPRODUCED, ALTERED, OR USED BY ANYONE, OR ANY ORGANIZATION, WITHOUT THE EXPRESSED WRITTEN CONSENT OF THE ALABAMA DEPARTMENT OF TRANSPORTATION REPRESENTATIVE AUTHORIZED TO APPROVE THIS USE. ANYONE MAKING UNAUTHORIZED USE OF THIS DRAWING MAY BE PROSECUTED TO THE FULLEST EXTENT OF THE LAW.

REVISIONS

ALABAMA DEPARTMENT OF TRANSPORTATION
1409 COLISEUM BOULEVARD
MONTGOMERY, AL 36130-3050

DESIGN BUREAU SPECIAL DRAWING

DETAILS OF TEMPORARY SLOPE DRAIN, BERMS AND ENERGY DISSIPATOR

DRAWN BY: _____
DATE DRAWN: 2006

SPECIAL DRAWING NO. ESC-200 (SHEET 2 OF 4)

INDEX NO. 1161-A

REFERENCE PROJECT NO.	FISCAL YEAR	SHEET NO.

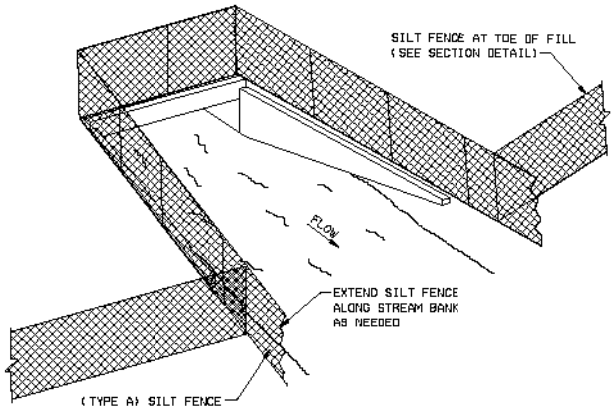

SEDIMENT BARRIER AT CROSS DRAIN

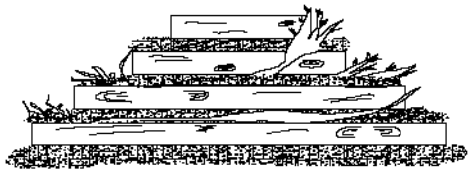

FRONT ELEVATION

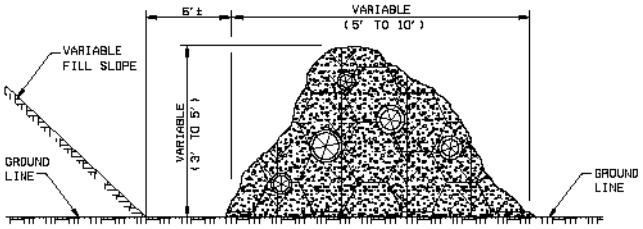

SIDE ELEVATION

TEMPORARY BRUSH BARRIER

NOTES:
1. BRUSH BARRIER MAY BE USED WHERE NATURAL GROUND IS LEVEL OR SLOPING AWAY FROM PROJECT.
2. PLACE BRUSH, LOG AND TREE LAPS APPROXIMATELY PARALLEL TO TOE OF FILL SLOPE WITH SOME OF THE HEAVIER MATERIALS BEING PLACED ON TOP TO PROPERLY SECURE THE BARRIER AS DETAILED AT LOCATIONS SHOWN ON PLANS OR AS DIRECTED OR PERMITTED BY THE ENGINEER.
3. TO ALLOW WATER TO SEEP THROUGH BRUSH BARRIER, INTERMINGLE THE BRUSH, LOG AND TREE LAPS SO AS NOT TO FORM A SOLID DAM.
4. THE BRUSH BARRIER MAY BE CHOKED WITH FILTER FABRIC.

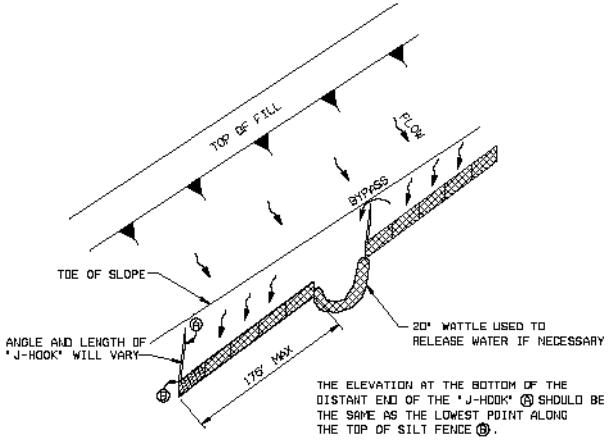

"J-HOOK" SILT FENCE APPLICATION

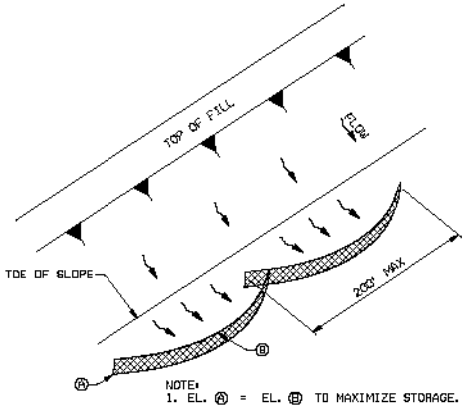

NOTE:
1. EL. Ⓐ = EL. Ⓑ TO MAXIMIZE STORAGE.

"SMILE-CONFIGURATION" SILT FENCE APPLICATION

NOTE:
1. ANCHOR AND INSTALL SILT FENCE PER DETAILS SHOWN ON SPECIAL DRAWING SHT. 4 OF 4

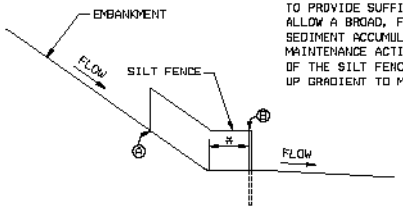

* SILT FENCE SHOULD BE LOCATED AWAY FROM THE TOE OF THE SLOPE TO PROVIDE SUFFICIENT SPACE TO ALLOW A BROAD, FLAT AREA FOR SEDIMENT ACCUMULATION AND MAINTENANCE ACTIVITIES. THE ENDS OF THE SILT FENCE SHOULD BE TURNED UP GRADIENT TO MAXIMIZE STORAGE.

SILT FENCE SECTION AT TOE OF FILL

--SPECIFICATIONS--
CURRENT ALABAMA DEPARTMENT OF TRANSPORTATION

THIS DRAWING REPRESENTS DESIGNS PREPARED FOR USE BY THE ALABAMA DEPARTMENT OF TRANSPORTATION AND IS NOT TO BE COPIED, REPRODUCED, ALTERED, OR USED BY ANYONE, OR ANY ORGANIZATION, WITHOUT THE EXPRESSED WRITTEN CONSENT OF THE ALABAMA DEPARTMENT OF TRANSPORTATION REPRESENTATIVE AUTHORIZED TO APPROVE THIS USE. ANYONE MAKING UNAUTHORIZED USE OF THIS DRAWING MAY BE PROSECUTED TO THE FULLEST EXTENT OF THE LAW.

REVISIONS

ALABAMA DEPARTMENT OF TRANSPORTATION
1409 COLISEUM BOULEVARD
MONTGOMERY, AL 36130-3050

DESIGN BUREAU SPECIAL DRAWING

DETAILS OF SEDIMENT BARRIER APPLICATIONS

DRAWN BY: _____
DATE DRAWN: 2006

SPECIAL DRAWING NO.: ESC-200 (SHEET 3 OF 4)

INDEX NO.: 1161-B

REFERENCE PROJECT NO.	FISCAL YEAR	SHEET NO.

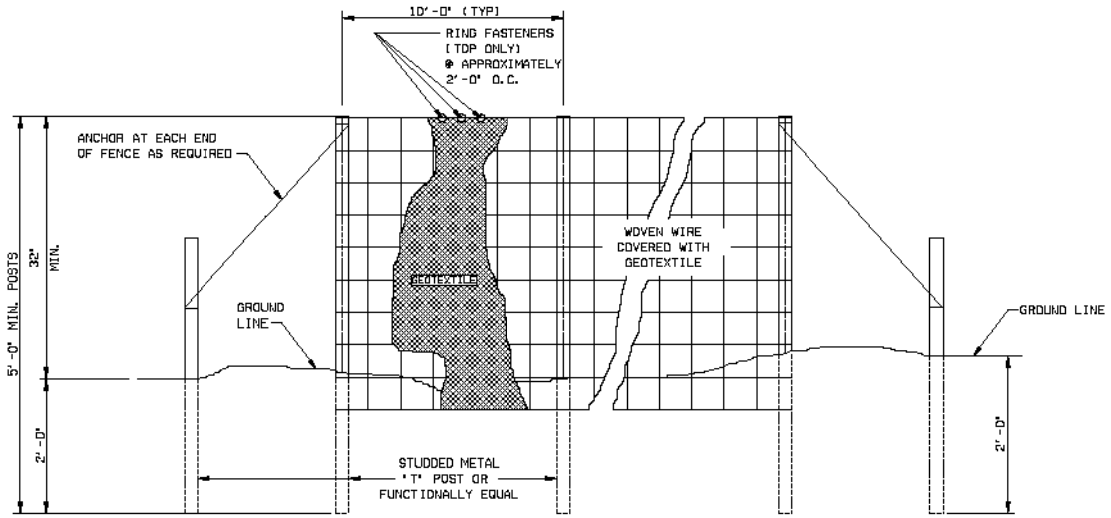

ELEVATION VIEW

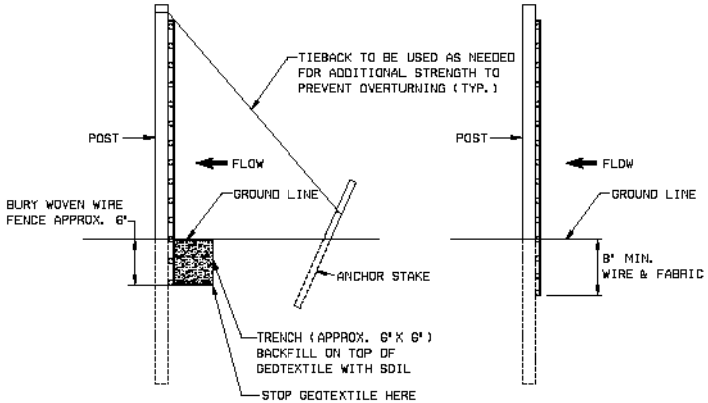

METHOD I

METHOD II
MECHANICAL INSTALLATION

SIDE VIEW

NOTES:
1. METHOD II FENCE INSTALLATION ALSO TO INCLUDE ANCHORS AND TIEBACKS AS REQUIRED.
2. SILT FENCE SHALL BE USED IN AREAS WHERE FLOW IS NOT SEVERE OR AS DIRECTED BY THE ENGINEER.
3. SILT FENCES ARE TEMPORARY SEDIMENT CONTROL ITEMS THAT SHALL BE ERECTED OPPOSITE ERODIBLE AREAS SUCH AS NEWLY GRADED FILL SLOPES AND ADJACENT TO STREAMS AND CHANNELS.
4. SILT FENCE SHOULD BE PLACED WELL INSIDE RIGHT-OF-WAY AND ALONG EDGE OF CLEARING LIMITS. THIS WILL ALLOW ROOM FOR A BACK-UP FENCE IF FIRST BECOMES FULL.
5. WHEREVER POSSIBLE SILT FENCES SHALL BE CONSTRUCTED ACROSS A LEVEL AREA IN THE SHAPE OF A SMILE. THIS AIDS IN PONDING OF RUNOFF AND FACILITATES SEDIMENTATION.
6. THE CONTRACTOR MAY ELECT TO USE EITHER METHOD I OR METHOD II. COST TO BE LINEAR FEET OF SILT FENCE.
7. METHOD II INSTALLATION SHALL BE ACCOMPLISHED USING AN IMPLEMENT THAT IS MANUFACTURED FOR THE APPLICATION AND PROVIDES A CONFIGURATION MEETING THE REQUIREMENTS OF THE DETAIL.

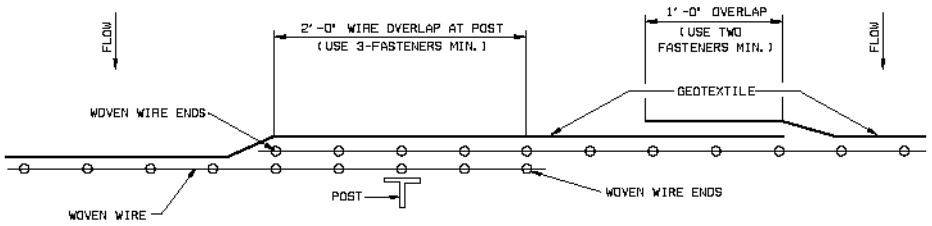

PLAN VIEW

REQUIRED LAPPING

--SPECIFICATIONS--
CURRENT ALABAMA DEPARTMENT OF TRANSPORTATION

THIS DRAWING REPRESENTS DESIGNS PREPARED FOR USE BY THE ALABAMA DEPARTMENT OF TRANSPORTATION AND IS NOT TO BE COPIED, REPRODUCED, ALTERED, OR USED BY ANYONE, OR ANY ORGANIZATION, WITHOUT THE EXPRESSED WRITTEN CONSENT OF THE ALABAMA DEPARTMENT OF TRANSPORTATION REPRESENTATIVE AUTHORIZED TO APPROVE THIS USE. ANYONE MAKING UNAUTHORIZED USE OF THIS DRAWING MAY BE PROSECUTED TO THE FULLEST EXTENT OF THE LAW.

REVISIONS
1. Revised Fence height and deleted Type A1 from the Silt Fence description on 07-12-07 by B.W.A.

ALABAMA DEPARTMENT OF TRANSPORTATION
1409 COLISEUM BOULEVARD
MONTGOMERY, AL 36130-3050

DESIGN BUREAU SPECIAL DRAWING

DETAILS OF SILT FENCE INSTALLATION

DRAWN BY: _____
DATE DRAWN: 2006

SPECIAL DRAWING NO. ESC-200 (SHEET 4 OF 4)

INDEX NO. 1161-C

REFERENCE PROJECT NO.	FISCAL YEAR	SHEET NO.

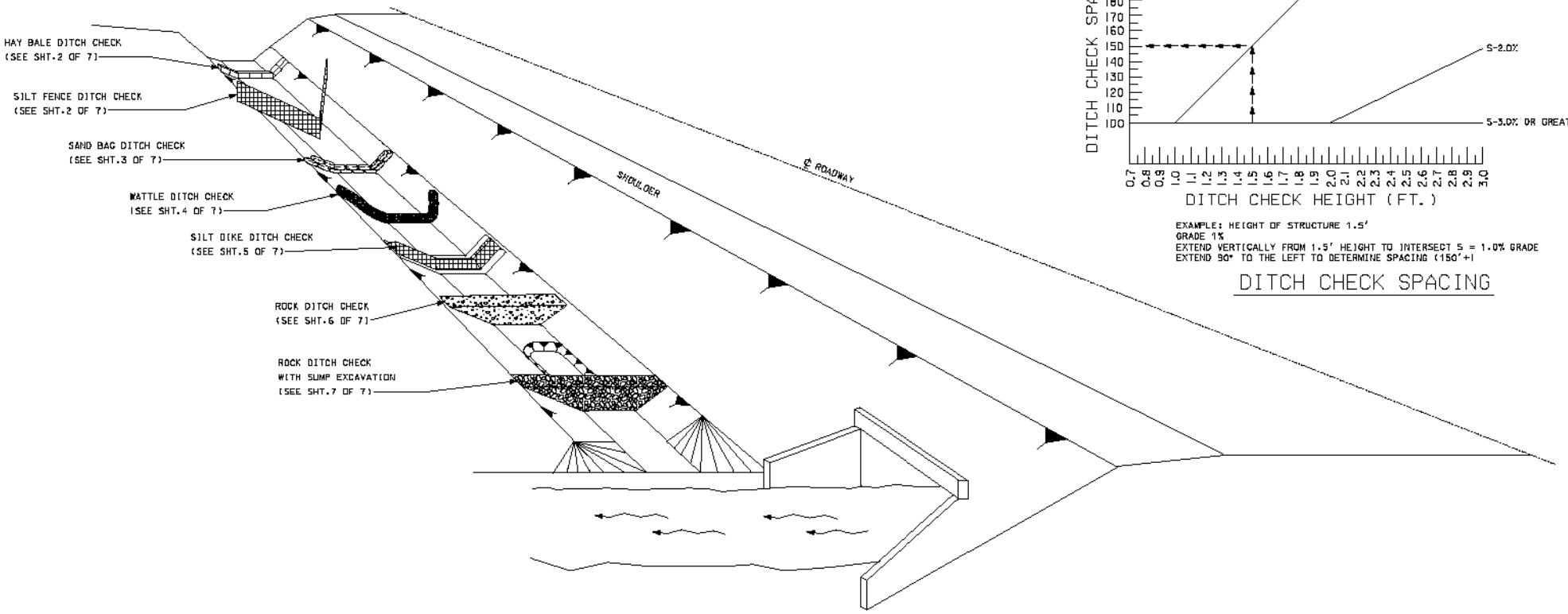

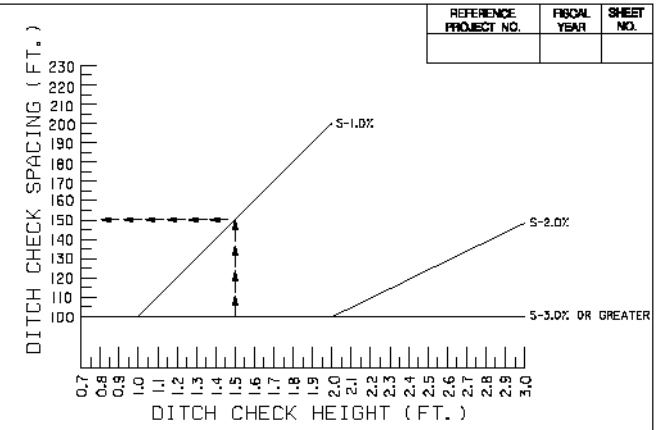

EXAMPLE: HEIGHT OF STRUCTURE 1.5'
GRADE 1%
EXTEND VERTICALLY FROM 1.5' HEIGHT TO INTERSECT S = 1.0% GRADE
EXTEND 90° TO THE LEFT TO DETERMINE SPACING (150'+)

DITCH CHECK SPACING

NOTES:

1. THE DITCH CHECK PERSPECTIVE ILLUSTRATES A TOOL BOX OF TEMPORARY PRACTICES THAT MAY BE DIRECTED OR PERMITTED BY THE ENGINEER. DITCH CHECKS ARE INSTALLED TO CONTROL RUNOFF VELOCITY AND THUS REDUCE EROSION AND PROVIDE FOR TRAPPING OF SEDIMENTS.
2. SELECTION OF THE APPROPRIATE DITCH CHECK SHOULD BE A FUNCTION OF CONSTRUCTION PHASE, DRAINAGE AREA, DITCH GRADIENT, SOIL TYPE ECONOMY AND SAFETY.
3. DITCH CHECKS CAN BE REMOVED FOR MAINTENANCE AND/OR REPLACEMENT BUT MUST REMAIN IN PLACE UNTIL UPSLOPE AREAS HAVE BEEN PERMANENTLY STABILIZED. MAINTENANCE INCLUDES REMOVAL OF SEDIMENT BEGINNING WHEN SEDIMENT ACCUMULATION REACHES 1/3 THE CAPACITY OR HEIGHT OF THE STRUCTURE AND NEVER ALLOWING FOR SEDIMENT TO ACCUMULATE MORE THAN 1/2 THE VOLUME OR HEIGHT OF THE DITCH CHECK STRUCTURE.
4. HAY BALES ARE USED TO INTERCEPT LOW VOLUME FLOWS IN LOW TO MODERATE GRADIENT DITCHES.
5. SILT FENCE DITCH CHECKS ARE USED WHERE IT HAS BEEN DETERMINED THAT HAY BALE CHECKS ARE INADEQUATE, OR SILT FENCE DITCH CHECKS CAN BE JUSTIFIED BASED ON COST. SILT FENCE DITCH CHECKS ARE USED TO INTERCEPT LOW VOLUME FLOWS IN LOW TO MODERATE GRADIENT DITCHES.
6. SAND BAG DITCH CHECKS ARE USED FOR VELOCITY REDUCTION AND MINIMAL SEDIMENT TRAPPING IN CONCRETE PAVED DITCHES OR IN DITCHES THAT HAVE ROCKY BOTTOMS.
7. WATTLE DITCH CHECKS ARE APPROPRIATE FOR VELOCITY REDUCTION AND CONTROL OF SEDIMENT TRANSPORT UNDER LOW TO MEDIUM FLOW CONDITIONS.
8. SILT DIKES CAN BE USED IN DITCHES WITH CONCENTRATED FLOWS WITHIN THE CLEAR ZONE WHERE RIPRAP CAN NOT BE USED. AS CONSTRUCTION PROGRESSES.
9. THE TYPE AND SIZE OF ROCK USED TO CONSTRUCT ROCK DITCH CHECKS WILL BE SELECTED BY THE DESIGNER AND SHOWN ON THE PLANS. THE SIZE OF ROCK CHOSEN SHOULD BE PROPORTIONAL TO EXPECTED FLOWS AND VELOCITIES. SEDIMENT TRAPPING EFFECTIVENESS MAY BE ADJUSTED BY CHOKING.
10. ROCK DITCH CHECK WITH SUMP EXCAVATION CAN BE PLACED IN DITCHES TO ASSURE ON-SITE SEDIMENT TRAPPING REQUIREMENTS ARE MET. DITCH CHECK WITH SUMP EXCAVATION IS USED WHEN DITCHES RECEIVE DRAINAGE FROM CUT OR FILL SLOPES OR OTHER CRITICAL AREAS WHERE SOIL EROSION IS EXPECTED. DRAINAGE AREA FOR A TEMPORARY SEDIMENT TRAP SHALL NOT EXCEED 3 ACRES. THEY CAN BE USED IN SERIES TO INCREASE ON-SITE SEDIMENT TRAPPING EFFICIENCY.
11. IN GENERAL, DITCH CHECKS SHOULD NOT BE PLACED IN LIVE STREAMS. SEE SPECIFICATIONS.
12. CONFIGURATION AND SPACING MAY BE ADJUSTED IF APPROVED BY THE ENGINEER TO ACCOMODATE TRAVELWAY SAFETY, WATER FLOW, OR SOIL AND INSTALLATION CHALLENGES.

--SPECIFICATIONS--
CURRENT ALABAMA DEPARTMENT OF TRANSPORTATION

THIS DRAWING REPRESENTS DESIGNS PREPARED FOR USE BY THE ALABAMA DEPARTMENT OF TRANSPORTATION AND IS NOT TO BE COPIED, REPRODUCED, ALTERED, OR USED BY ANYONE, OR ANY ORGANIZATION, WITHOUT THE EXPRESSED WRITTEN CONSENT OF THE ALABAMA DEPARTMENT OF TRANSPORTATION REPRESENTATIVE AUTHORIZED TO APPROVE THIS USE. ANYONE MAKING UNAUTHORIZED USE OF THIS DRAWING MAY BE PROSECUTED TO THE FULLEST EXTENT OF THE LAW.

REVISIONS

ALABAMA DEPARTMENT OF TRANSPORTATION
1409 COLISEUM BOULEVARD
MONTGOMERY, AL 36130-3050

DESIGN BUREAU SPECIAL DRAWING

DITCH CHECK STRUCTURES,
TYPICAL APPLICATIONS AND DETAILS

DRAWN BY: _____
DATE DRAWN: 2006

SPECIAL DRAWING NO.: ESC-300 (SHEET 1 OF 7)

INDEX NO.: 1162

REFERENCE PROJECT NO.	FISCAL YEAR	SHEET NO.

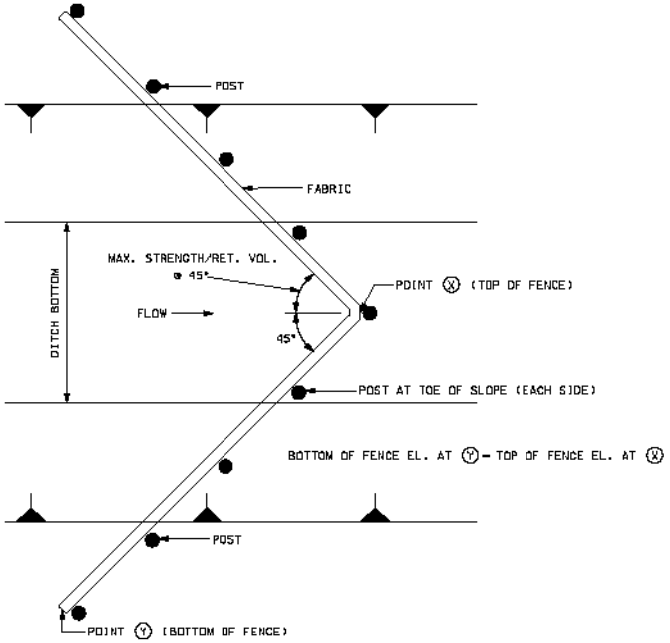

PLAN VIEW

NOTES:

1. ANCHOR AND INSTALL SILT FENCE DITCH CHECK PER DETAILS SHOWN ON SPECIAL DRAWING ESC-200. THE LOCATIONS AND SPACING OF SILT FENCE DITCH CHECKS ALONG A DITCH SHOULD BE 100 FEET UNLESS OTHERWISE SHOWN ON PLANS OR APPROVED BY THE ENGINEER.
2. A "W" SHAPE MAY BE USED FOR WIDER DITCHES.

SILT FENCE DITCH CHECK SELECTION GUIDELINES

SILT FENCE DITCH CHECKS ARE USED WHERE IT HAS BEEN DETERMINED THAT HAY BALE CHECKS ARE INADEQUATE. OR SILT FENCE DITCH CHECKS CAN BE JUSTIFIED BASED ON COST. SILT FENCE DITCH CHECKS ARE USED TO INTERCEPT LOW VOLUME FLOWS IN LOW TO MODERATE GRADIENT DITCHES.

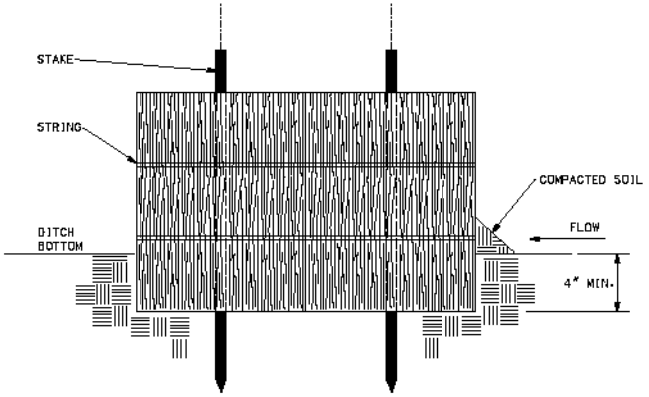

SECTION A-A

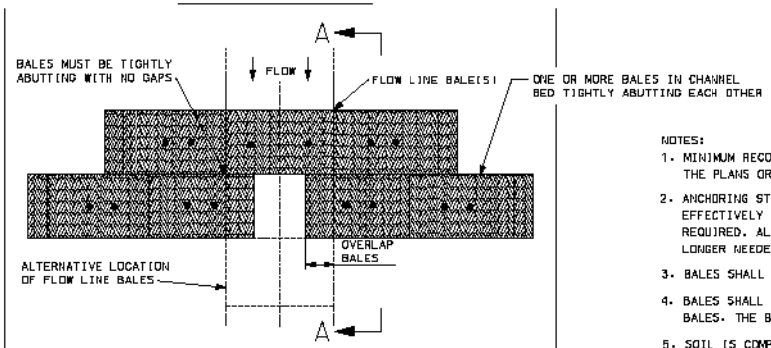

PLAN VIEW
TRAPEZOIDAL DITCH

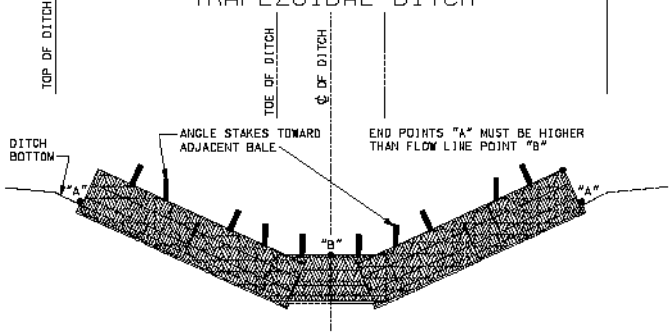

PROFILE VIEW
TRAPEZOIDAL DITCH

NOTES:

1. MINIMUM RECOMMENDED CHECK SPACING IS 100 FEET UNLESS SHOWN OTHERWISE ON THE PLANS OR APPROVED BY THE ENGINEER. SEE SPACING GUIDANCE ON SHT.1 OF 7.
2. ANCHORING STAKES SHALL BE SIZED, SPACED, AND BE OF A MATERIAL THAT EFFECTIVELY SECURES THE CHECK. A MINIMUM OF TWO STAKES PER BALE IS REQUIRED. ALL NON-DEGRADABLE MATERIALS SHALL BE REMOVED WHEN NO LONGER NEEDED.
3. BALES SHALL BE EMBEDDED IN THE SOIL A MIN. OF 4".
4. BALES SHALL BE PLACED IN A ROW WITH ENDS TIGHTLY ABUTTING THE ADJACENT BALES. THE BALES SHALL BE PLACED WITH BINDINGS PARALLEL TO THE GROUND.
5. SOIL IS COMPACTED ALONG THE BASE OF THE UPSTREAM FACE TO PREVENT PIPING.
6. MULTIPLE ADJACENT ROWS OF BALES ARE REQUIRED AS SHOWN.

HAY BALE DITCH CHECK SELECTION GUIDELINES

HAY BALES ARE USED TO INTERCEPT LOW VOLUME FLOWS IN LOW TO MODERATE GRADIENT DITCHES.

--SPECIFICATIONS--
CURRENT ALABAMA DEPARTMENT OF TRANSPORTATION

THIS DRAWING REPRESENTS DESIGNS PREPARED FOR USE BY THE ALABAMA DEPARTMENT OF TRANSPORTATION AND IS NOT TO BE COPIED, REPRODUCED, ALTERED, OR USED BY ANYONE, OR ANY ORGANIZATION, WITHOUT THE EXPRESSED WRITTEN CONSENT OF THE ALABAMA DEPARTMENT OF TRANSPORTATION REPRESENTATIVE AUTHORIZED TO APPROVE THIS USE. ANYONE MAKING UNAUTHORIZED USE OF THIS DRAWING MAY BE PROSECUTED TO THE FULLEST EXTENT OF THE LAW.

REVISIONS

ALABAMA DEPARTMENT OF TRANSPORTATION
1409 COLISEUM BOULEVARD
MONTGOMERY, AL 36130-3050

DESIGN BUREAU SPECIAL DRAWING

TEMPORARY EROSION, SEDIMENT AND WATER POLLUTION CONTROL MEASURES, SILT FENCE AND HAY BALE DITCH CHECKS

DRAWN BY: _____
DATE DRAWN: 2006

SPECIAL DRAWING NO.: ESC-300 (SHEET 2 OF 7)

INDEX NO.: 1162-A

REFERENCE PROJECT NO.	FISCAL YEAR	SHEET NO.

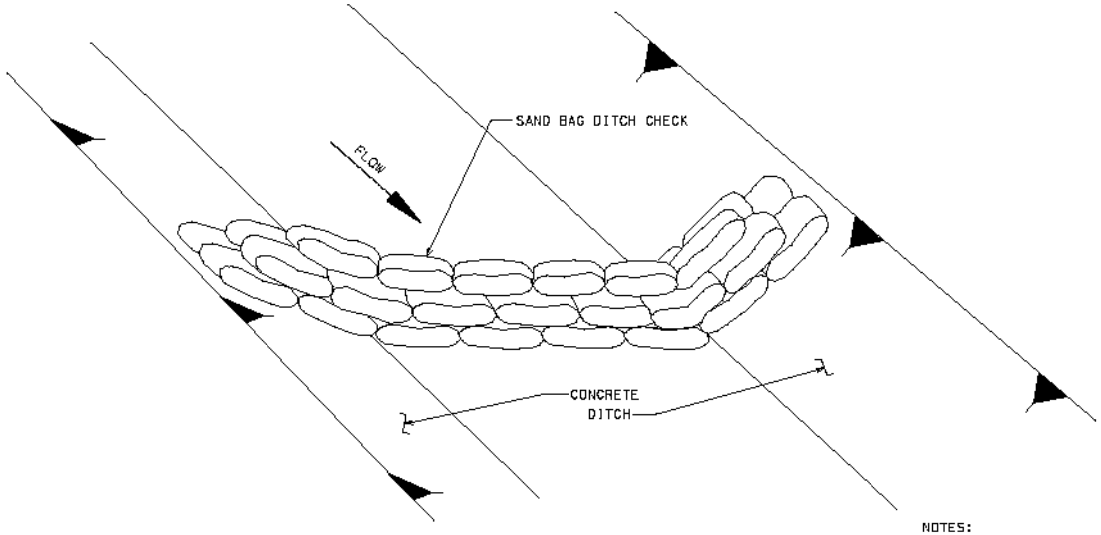

DETAIL (DITCH CHECK)

NOTES:

1. MINIMUM RECOMMENDED PLACEMENT INTERVAL BETWEEN SAND BAG DITCH CHECK IS 100' UNLESS SHOWN OTHERWISE ON THE PLANS OR APPROVED BY THE ENGINEER. SEE SPACING GUIDANCE ON SHT.1 OF 7.

2. PREVENTING SEDIMENT FROM ENTERING A PAVED DITCH IS PREFERABLE TO CAPTURING SEDIMENT WITHIN PAVED DITCH.

SAND BAG DITCH CHECK SELECTION GUIDELINES

SAND BAG DITCH CHECKS ARE USED FOR VELOCITY REDUCTION AND MINIMAL SEDIMENT TRAPPING IN CONCRETE PAVED DITCHES OR IN DITCHES THAT HAVE ROCKY BOTTOMS.

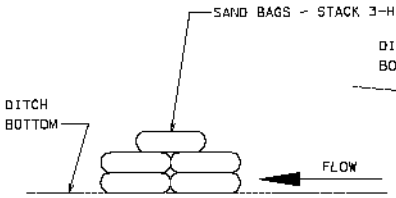

SECTION A-A

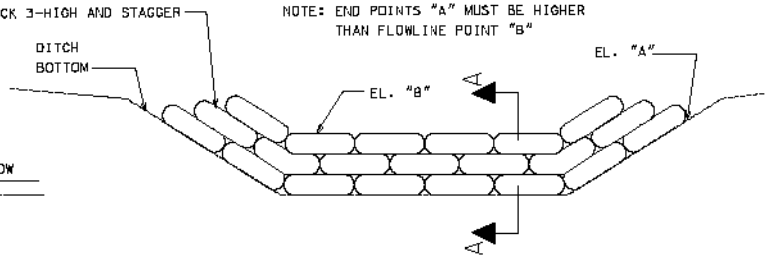

ELEVATION DETAIL

--SPECIFICATIONS--
CURRENT ALABAMA DEPARTMENT OF TRANSPORTATION

THIS DRAWING REPRESENTS DESIGNS PREPARED FOR USE BY THE ALABAMA DEPARTMENT OF TRANSPORTATION AND IS NOT TO BE COPIED, REPRODUCED, ALTERED, OR USED BY ANYONE, OR ANY ORGANIZATION, WITHOUT THE EXPRESSED WRITTEN CONSENT OF THE ALABAMA DEPARTMENT OF TRANSPORTATION REPRESENTATIVE AUTHORIZED TO APPROVE THIS USE. ANYONE MAKING UNAUTHORIZED USE OF THIS DRAWING MAY BE PROSECUTED TO THE FULLEST EXTENT OF THE LAW.

REVISIONS

ALABAMA DEPARTMENT OF TRANSPORTATION
1409 COLISEUM BOULEVARD
MONTGOMERY, AL 36130-3050

DESIGN BUREAU SPECIAL DRAWING

DETAILS OF EROSION CONTROL
SANDBAG DITCH CHECK

DRAWN BY: _____
DATE DRAWN: 2006

SPECIAL DRAWING NO.: ESC-300 (SHEET 3 OF 7)

INDEX NO.: 1162-B

REFERENCE PROJECT NO.	FISCAL YEAR	SHEET NO.

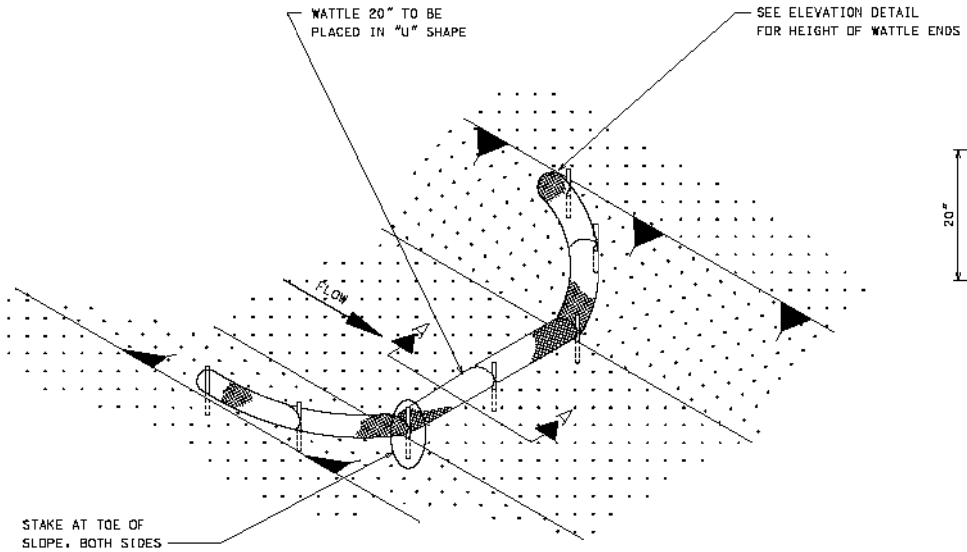

DETAIL (DITCH CHECK)

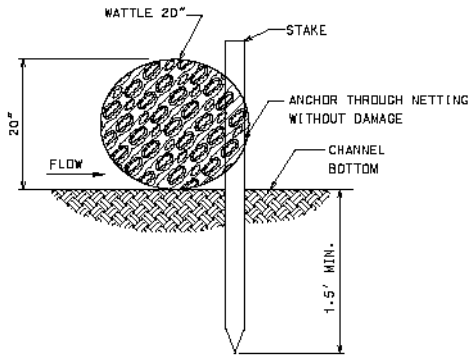

SECTION A-A

NOTES:

1. MINIMUM RECOMMENDED PLACEMENT INTERVAL BETWEEN WATTLE DITCH CHECK IS 100' UNLESS SHOWN OTHERWISE ON THE PLANS OR APPROVED BY THE ENGINEER. SEE SPACING GUIDANCE ON SHT.1 OF 7.
2. ANCHORING STAKES SHALL BE SIZED, SPACED, DRIVEN, AND BE OF A MATERIAL THAT EFFECTIVELY SECURES THE CHECK. STAKE SPACING SHALL BE A MAXIMUM OF THREE FEET. ALL NON-DEGRADABLE MATERIALS SHALL BE REMOVED WHEN NO LONGER NEEDED.
3. TRENCHING OF WATTLES MAY BE NECESSARY IF PIPING BECOMES EVIDENT.
4. WATTLES SHOULD NOT BE USED IN HARD BOTTOM CHANNELS.

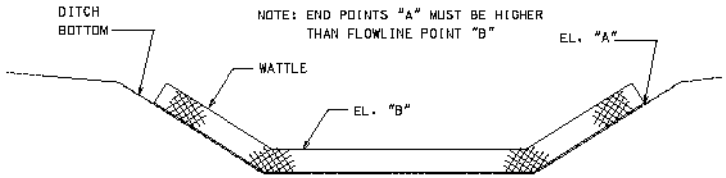

ELEVATION DETAIL

WATTLE DITCH CHECK SELECTION GUIDELINES

WATTLE DITCH CHECKS ARE APPROPRIATE FOR VELOCITY REDUCTION AND CONTROL OF SEDIMENT TRANSPORT UNDER LOW TO MEDIUM FLOW CONDITIONS.

--SPECIFICATIONS--
CURRENT ALABAMA DEPARTMENT OF TRANSPORTATION

THIS DRAWING REPRESENTS DESIGNS PREPARED FOR USE BY THE ALABAMA DEPARTMENT OF TRANSPORTATION AND IS NOT TO BE COPIED, REPRODUCED, ALTERED, OR USED BY ANYONE, OR ANY ORGANIZATION, WITHOUT THE EXPRESSED WRITTEN CONSENT OF THE ALABAMA DEPARTMENT OF TRANSPORTATION REPRESENTATIVE AUTHORIZED TO APPROVE THIS USE. ANYONE MAKING UNAUTHORIZED USE OF THIS DRAWING MAY BE PROSECUTED TO THE FULLEST EXTENT OF THE LAW.

REVISIONS

ALABAMA DEPARTMENT OF TRANSPORTATION
1409 COLISEUM BOULEVARD
MONTGOMERY, AL 36130-3050

DESIGN BUREAU SPECIAL DRAWING

DETAILS OF EROSION CONTROL
WATTLE DITCH CHECK

DRAWN BY: _____
DATE DRAWN: 2006

SPECIAL DRAWING NO.: ESC-300 (SHEET 4 OF 7)

INDEX NO.: 1162-C

1162C_112006.dgn 9/14/2007 8:02:24 AM

REFERENCE PROJECT NO.	FISCAL YEAR	SHEET NO.

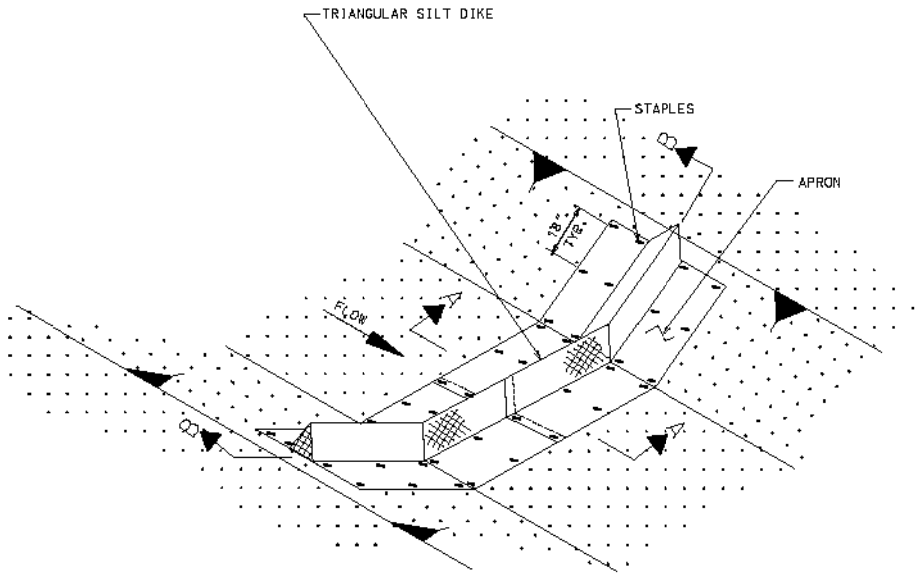

PLAN VIEW

SILT DIKE DITCH CHECK SELECTION GUIDELINES

SILT DIKES CAN BE USED IN DITCHES WITH CONCENTRATED FLOWS WITHIN THE CLEAR ZONE WHERE RIPRAP CAN NOT BE USED.

NOTE:
1. MINIMUM RECOMMENDED PLACEMENT INTERVAL BETWEEN SILT DIKE DITCH CHECK IS 100' UNLESS SHOWN OTHERWISE ON THE PLANS OR APPROVED BY THE ENGINEER. SEE SPACING GUIDANCE ON SHT.1 OF 7.
2. INSTALLATION SHALL BE IN ACCORDANCE WITH MANUFACTURERS RECOMMENDATIONS.

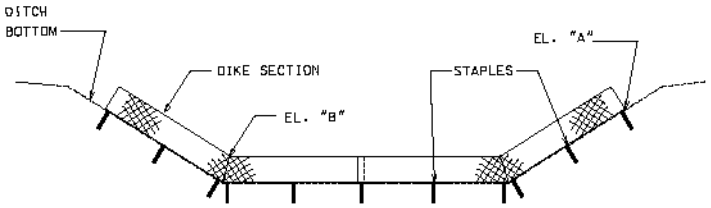

POINT "A" MUST BE HIGHER THAN POINT "B" TO ENSURE THAT WATER FLOWS OVER THE DIKE AND NOT AROUND THE ENDS

SECTION B-B

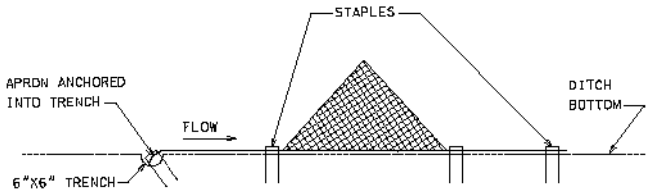

NOTE: STAPLES SHALL BE PLACED WHERE THE UNITS OVERLAP AND IN THE CENTER OF THE UNIT

SECTION A-A

SILT DIKE INSTALLATION FOR ROADWAY DITCHES

--SPECIFICATIONS--
CURRENT ALABAMA DEPARTMENT OF TRANSPORTATION

THIS DRAWING REPRESENTS DESIGNS PREPARED FOR USE BY THE ALABAMA DEPARTMENT OF TRANSPORTATION AND IS NOT TO BE COPIED, REPRODUCED, ALTERED, OR USED BY ANYONE, OR ANY ORGANIZATION, WITHOUT THE EXPRESSED WRITTEN CONSENT OF THE ALABAMA DEPARTMENT OF TRANSPORTATION REPRESENTATIVE AUTHORIZED TO APPROVE THIS USE. ANYONE MAKING UNAUTHORIZED USE OF THIS DRAWING MAY BE PROSECUTED TO THE FULLEST EXTENT OF THE LAW.

REVISIONS

ALABAMA DEPARTMENT OF TRANSPORTATION
1409 COLISEUM BOULEVARD
MONTGOMERY, AL 36130-3050

DESIGN BUREAU SPECIAL DRAWING

DETAILS OF EROSION CONTROL
SILT DIKE DITCH CHECK

DRAWN BY: _____
DATE DRAWN: 2006

SPECIAL DRAWING NO.: ESC-300 (SHEET 5 OF 7)

INDEX NO.: 1162-D

REFERENCE PROJECT NO.	FISCAL YEAR	SHEET NO.

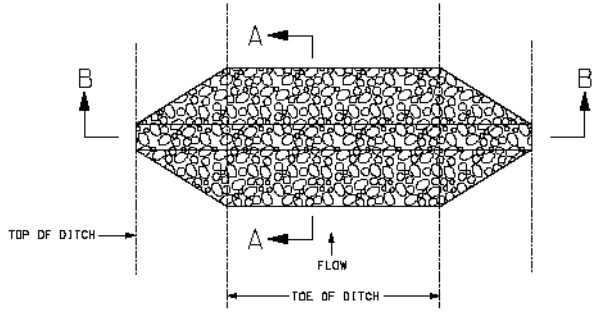

PLAN VIEW

DETAIL FOR TRAPEZOIDAL DITCH

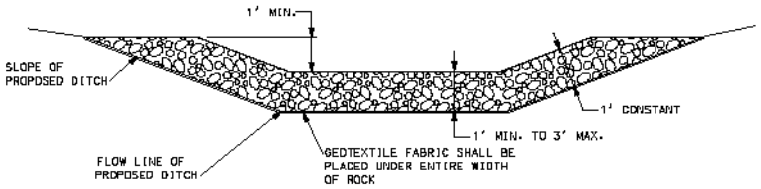

SECTION B-B

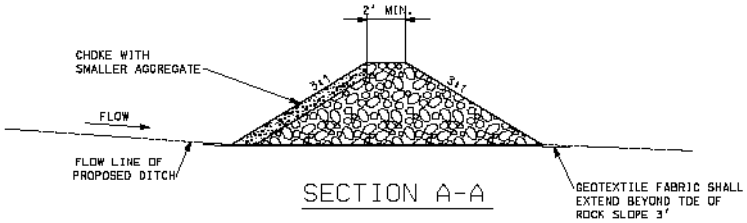

SECTION A-A

TEMPORARY ROCK DITCH CHECKS IN ROADSIDE DITCHES

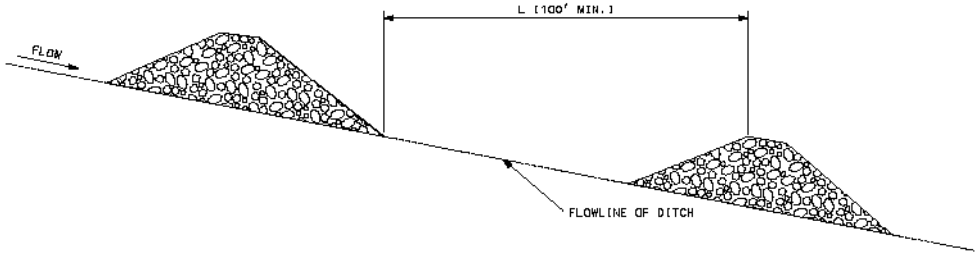

DETAIL FOR SPACING BETWEEN DITCH CHECKS

NOTES:
1. MINIMUM SPACING FOR ROCK DITCH CHECKS SHALL BE 100 FEET OR AS DIRECTED BY THE ENGINEER. SEE SPACING GUIDANCE ON SHT.1 OF 7.
2. ROCK DITCH CHECKS MAY ALSO BE CHOKED WITH FABRIC.

ROCK DITCH CHECK SELECTION GUIDELINES

THE TYPE AND SIZE OF ROCK USED TO CONSTRUCT THE CHECK WILL BE SELECTED BY THE DESIGNER AND SHOWN ON THE PLANS. THE SIZE OF ROCK CHOSEN WILL BE PROPORTIONAL TO EXPECTED FLOWS AND VELOCITIES. SEDIMENT TRAPPING EFFECTIVENESS MAY BE ADJUSTED BY CHOKING.

--SPECIFICATIONS--
CURRENT ALABAMA DEPARTMENT OF TRANSPORTATION

THIS DRAWING REPRESENTS DESIGNS PREPARED FOR USE BY THE ALABAMA DEPARTMENT OF TRANSPORTATION AND IS NOT TO BE COPIED, REPRODUCED, ALTERED, OR USED BY ANYONE, OR ANY ORGANIZATION, WITHOUT THE EXPRESSED WRITTEN CONSENT OF THE ALABAMA DEPARTMENT OF TRANSPORTATION REPRESENTATIVE AUTHORIZED TO APPROVE THIS USE. ANYONE MAKING UNAUTHORIZED USE OF THIS DRAWING MAY BE PROSECUTED TO THE FULLEST EXTENT OF THE LAW.

REVISIONS

ALABAMA DEPARTMENT OF TRANSPORTATION
1409 COLISEUM BOULEVARD
MONTGOMERY, AL 36130-3050

DESIGN BUREAU SPECIAL DRAWING

ROCK DITCH CHECK

DRAWN BY: _____
DATE DRAWN: 2006

SPECIAL DRAWING NO.: ESC-300 (SHEET 6 OF 7)

INDEX NO.: 1162-E

REFERENCE PROJECT NO.	FISCAL YEAR	SHEET NO.

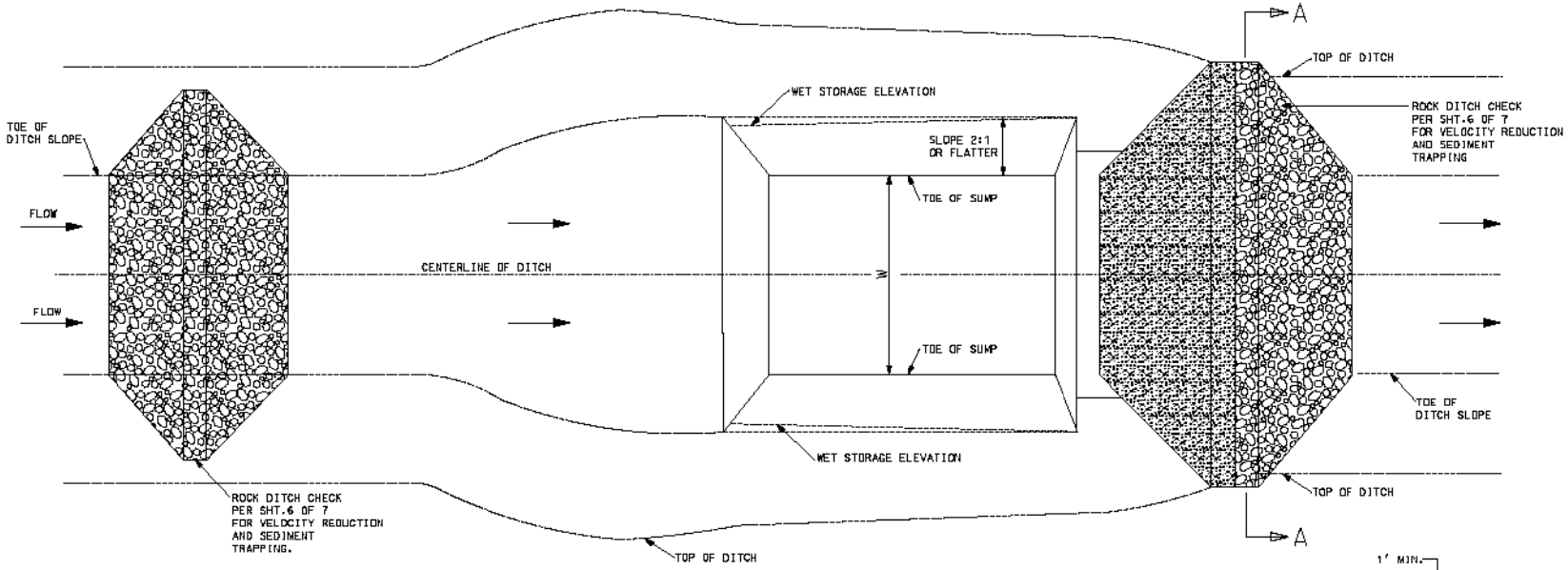

PLAN VIEW

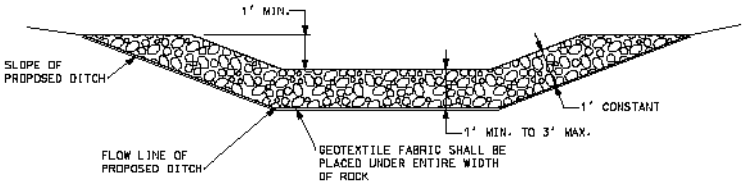

SECTION A-A

ROCK DITCH CHECK WITH SUMP EXCAVATION SELECTION GUIDELINES

THE TYPE AND SIZE OF ROCK USED TO CONSTRUCT THE CHECK WILL BE SELECTED BY THE DESIGNER AND SHOWN ON THE PLANS. THE SIZE OF ROCK CHOSEN WILL BE PROPORTIONAL TO EXPECTED FLOWS AND VELOCITIES. SEDIMENT TRAPPING EFFECTIVENESS MAY BE ADJUSTED BY CHOKING.

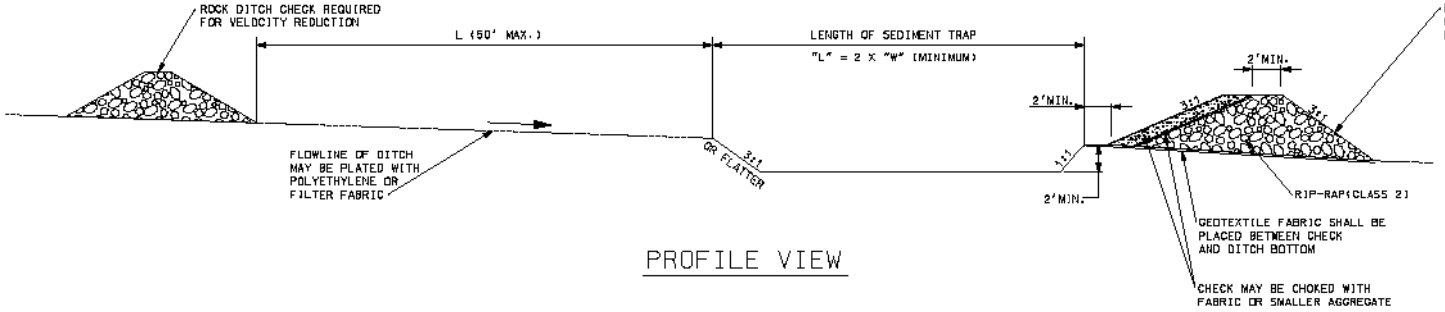

PROFILE VIEW

--SPECIFICATIONS--
CURRENT ALABAMA DEPARTMENT OF TRANSPORTATION

THIS DRAWING REPRESENTS DESIGNS PREPARED FOR USE BY THE ALABAMA DEPARTMENT OF TRANSPORTATION AND IS NOT TO BE COPIED, REPRODUCED, ALTERED, OR USED BY ANYONE, OR ANY ORGANIZATION, WITHOUT THE EXPRESSED WRITTEN CONSENT OF THE ALABAMA DEPARTMENT OF TRANSPORTATION REPRESENTATIVE AUTHORIZED TO APPROVE THIS USE. ANYONE MAKING UNAUTHORIZED USE OF THIS DRAWING MAY BE PROSECUTED TO THE FULLEST EXTENT OF THE LAW.

REVISIONS
1.Removed Dry & Storage Elevation graphs from the Profile View on 07-12-07 by M.L.L.

ALABAMA DEPARTMENT OF TRANSPORTATION
1409 COLISEUM BOULEVARD
MONTGOMERY, AL 36130-3050

DESIGN BUREAU SPECIAL DRAWING

ROCK DITCH CHECK WITH SUMP EXCAVATION

DRAWN BY: _____
DATE DRAWN: 2006

SPECIAL DRAWING NO.: ESC-300 (SHEET 7 OF 7)

INDEX NO.: 1162-F

REFERENCE PROJECT NO.	FISCAL YEAR	SHEET NO.

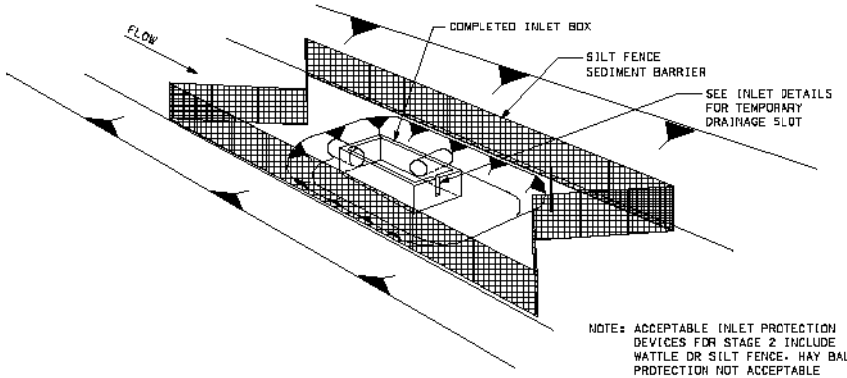

NOTE: ACCEPTABLE INLET PROTECTION DEVICES FOR STAGE 2 INCLUDE WATTLE OR SILT FENCE. HAY BALE PROTECTION NOT ACCEPTABLE DURING THIS PHASE.

STAGE 2

INLET/JUNCTION BOX
CONSTRUCTED BUT NOT BACKFILLED

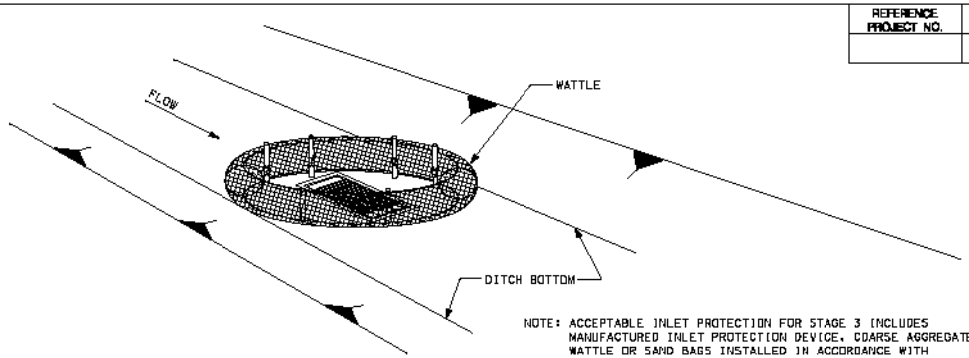

NOTE: ACCEPTABLE INLET PROTECTION FOR STAGE 3 INCLUDES MANUFACTURED INLET PROTECTION DEVICE, COARSE AGGREGATE, WATTLE OR SAND BAGS INSTALLED IN ACCORDANCE WITH (SHEETS 2 THRU 5 OF 5). HAY BALES NOT ACCEPTABLE PROTECTION DURING THIS STAGE. STAGE 3 MAY BE THE COMPLETION STAGE FOR SOME INLETS.

STAGE 3

INLET CONSTRUCTED AND BACKFILLED

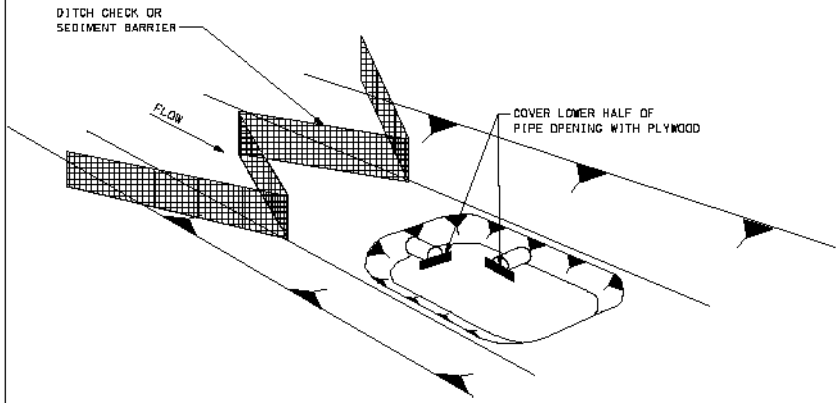

STAGE 1

INLET/JUNCTION BOX LOCATION EXCAVATED

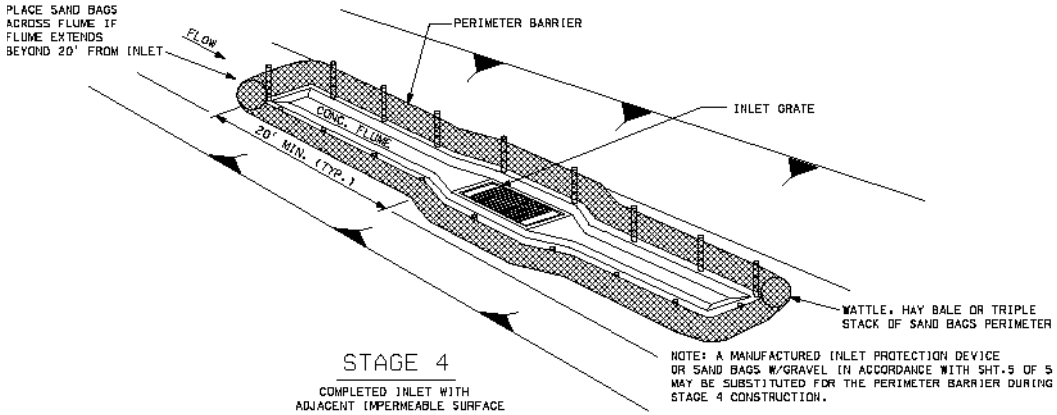

NOTE: A MANUFACTURED INLET PROTECTION DEVICE OR SAND BAGS W/GRAVEL IN ACCORDANCE WITH SHT.5 OF 5 MAY BE SUBSTITUTED FOR THE PERIMETER BARRIER DURING STAGE 4 CONSTRUCTION.

STAGE 4

COMPLETED INLET WITH
ADJACENT IMPERMEABLE SURFACE

DITCH INLET CONSTRUCTION STAGES

NOTES:

1. FOUNDATION BACKFILL SHOULD BE PLACED IN STAGE 1 IMMEDIATELY AFTER PIPE INSTALLATION. INLET CONSTRUCTION SHOULD COMMENCE AS SOON AS POSSIBLE AND BE CONTINUOUS THROUGH COMPLETION.
2. CONFIGURATIONS MAY BE ADJUSTED WITH APPROVAL OF THE ENGINEER FOR TRAVELWAY SAFETY, WATER FLOW, SOIL OR INSTALLATION CHALLENGES.
3. SEE SPECIAL DRAWING ESC-300 (SHT.2 OF 7) FOR SILT FENCE DETAILS.
4. SEE (SHT.3 OF 5) FOR WATTLE INSTALLATION DETAILS.
5. SEE SPECIAL DRAWING ESC-300 (SHT.2 OF 7) FOR HAY BALE INSTALLATION DETAILS.
6. SEE (SHT.4 OF 5) FOR MANUFACTURED INLET PROTECTION DEVICE INSTALLATION DETAILS.
7. DURING STAGE 1 AND STAGE 2, SILT FENCE MAY BE REQUIRED UPSLOPE OF THE INLET EXCAVATION AS DIRECTED BY THE ENGINEER.
8. IF SILT FENCING IS INSTALLED AROUND THE INLET EXCAVATION IT SHOULD BE PLACED IN A CONFIGURATION THAT WILL ALLOW INLET CONSTRUCTION.
9. FOR CURB INLET PROTECTION SEE SHT.3 OF 5 AND SHT.5 OF 5.

--SPECIFICATIONS--
CURRENT ALABAMA DEPARTMENT OF TRANSPORTATION

THIS DRAWING REPRESENTS DESIGNS PREPARED FOR USE BY THE ALABAMA DEPARTMENT OF TRANSPORTATION AND IS NOT TO BE COPIED, REPRODUCED, ALTERED, OR USED BY ANYONE, OR ANY ORGANIZATION, WITHOUT THE EXPRESSED WRITTEN CONSENT OF THE ALABAMA DEPARTMENT OF TRANSPORTATION REPRESENTATIVE AUTHORIZED TO APPROVE THIS USE. ANYONE MAKING UNAUTHORIZED USE OF THIS DRAWING MAY BE PROSECUTED TO THE FULLEST EXTENT OF THE LAW.

REVISIONS

ALABAMA DEPARTMENT OF TRANSPORTATION
1409 COLISEUM BOULEVARD
MONTGOMERY, AL 36130-3050

DESIGN BUREAU SPECIAL DRAWING

INLET PROTECTION
TYPICAL APPLICATIONS AND DETAILS

DRAWN BY: _____
DATE DRAWN: 2006

SPECIAL DRAWING NO.: ESC-400 (SHEET 1 OF 5)

INDEX NO.: 1163

REFERENCE PROJECT NO.	FISCAL YEAR	SHEET NO.

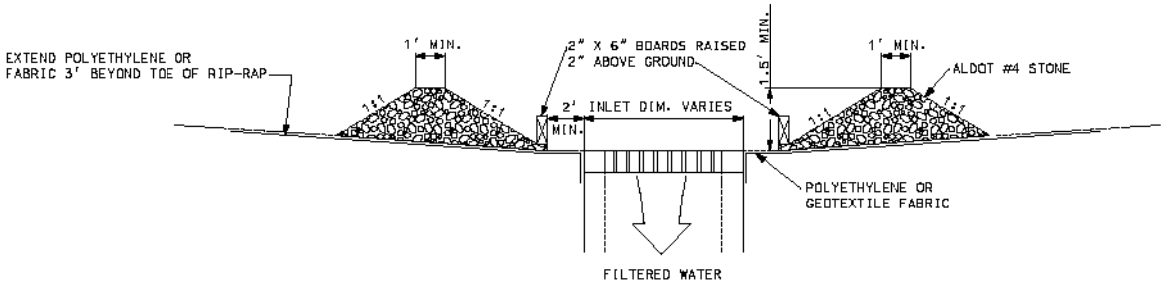

SECTION B-B

NOTES:

1. THE ELEVATION OF THE TOP OF THE REQUIRED STONE BERM SHALL BE A MINIMUM OF 1.5' ABOVE THE ELEVATION OF THE INLET WORKING POINT AND A MINIMUM OF 6" BELOW THE ELEVATION OF THE OUTSIDE EDGE OF THE INSIDE SHOULDER.
2. THIS COARSE AGGREGATE INLET PROTECTION SHALL NOT BE UTILIZED DURING STAGE 1 AND STAGE 2 INLET CONSTRUCTION. SEE (SHT.1 OF 5) FOR INLET PROTECTION TYPICAL APPLICATIONS AND DETAILS)
3. 2" X 6" BOARDS MAY BE REPLACED WITH WIRE MESH W/OPENINGS LESS THAN 1" X 1".

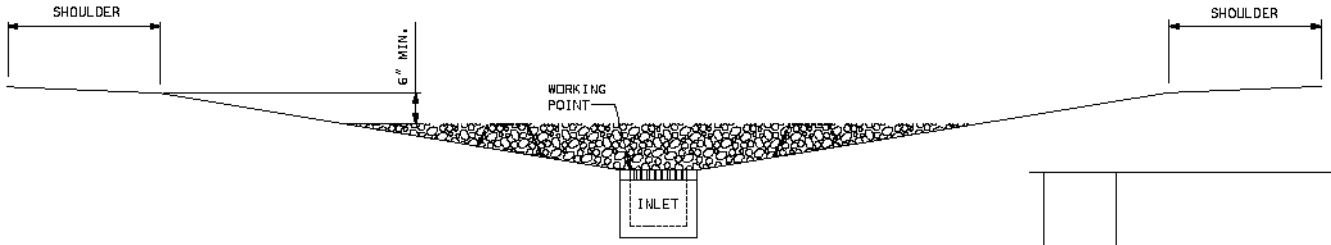

SECTION A-A

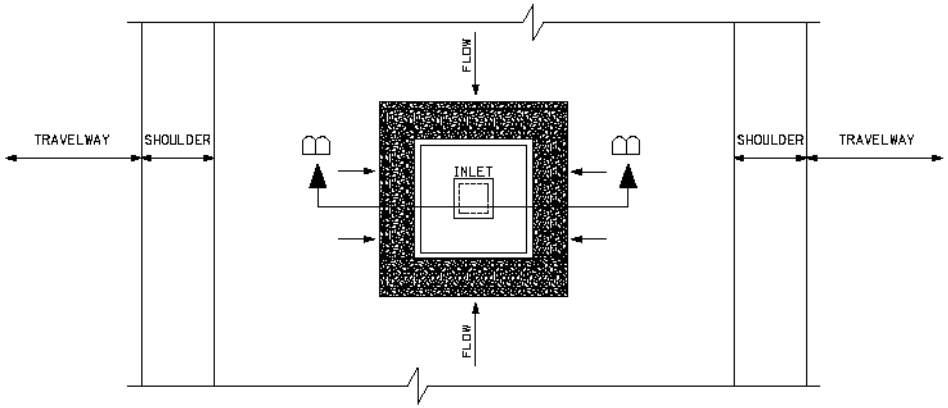

PLAN - IN SAG

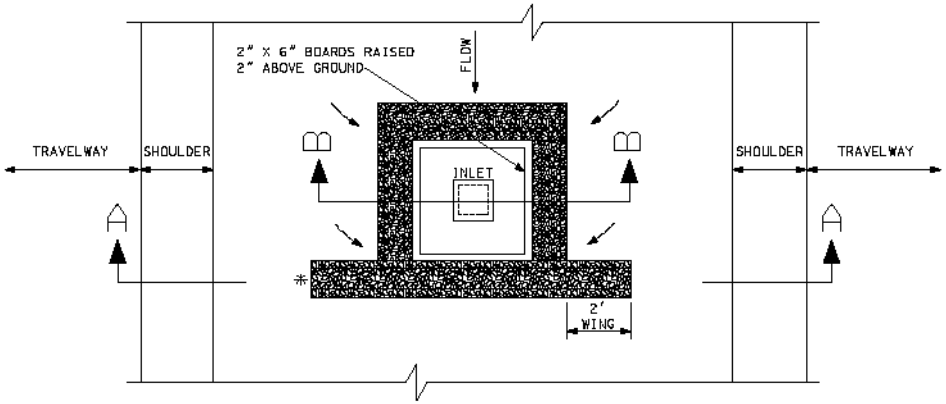

PLAN - ON GRADE

* CONSTRUCT WINGS TO PREVENT BYPASS

--SPECIFICATIONS--
CURRENT ALABAMA DEPARTMENT OF TRANSPORTATION

THIS DRAWING REPRESENTS DESIGNS PREPARED FOR USE BY THE ALABAMA DEPARTMENT OF TRANSPORTATION AND IS NOT TO BE COPIED, REPRODUCED, ALTERED, OR USED BY ANYONE, OR ANY ORGANIZATION, WITHOUT THE EXPRESSED WRITTEN CONSENT OF THE ALABAMA DEPARTMENT OF TRANSPORTATION REPRESENTATIVE AUTHORIZED TO APPROVE THIS USE. ANYONE MAKING UNAUTHORIZED USE OF THIS DRAWING MAY BE PROSECUTED TO THE FULLEST EXTENT OF THE LAW.

REVISIONS

ALABAMA DEPARTMENT OF TRANSPORTATION
1409 COLISEUM BOULEVARD
MONTGOMERY, AL 36130-3050

DESIGN BUREAU SPECIAL DRAWING

INLET PROTECTION
DETAILS FOR COARSE AGGREGATE
ON GRADES & SAGS

DRAWN BY: _____
DATE DRAWN: 2006

SPECIAL DRAWING NO.: ESC-400 (SHEET 2 OF 5)

INDEX NO.: 1163-A

1163A_112006.dgn 9/11/2007 8:00:06 AM

REFERENCE PROJECT NO.	FISCAL YEAR	SHEET NO.

NOTE:
SILT FENCE OR SAND BAGS MAY ALSO BE USED FOR THIS APPLICATION.
HAY BALES NOT ACCEPTABLE DURING THIS STAGE.

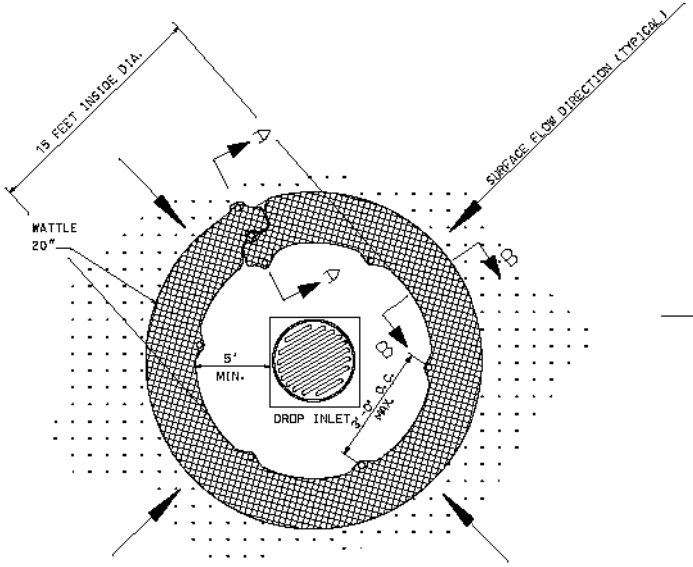

PLAN VIEW

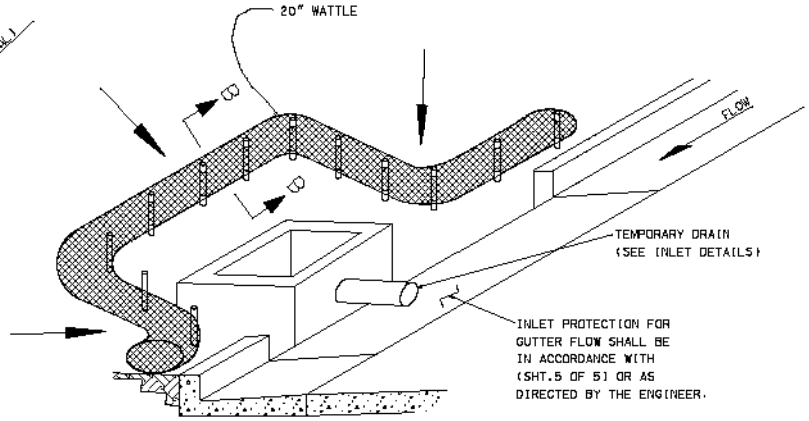

CURB INLET PROTECTION (STAGE 2)

SINGLE OR DOUBLE WING INLET

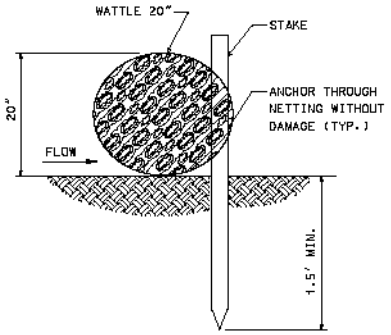

SECTION B-B

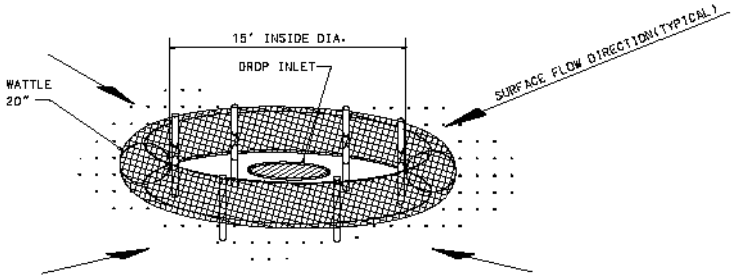

DROP INLET PROTECTION

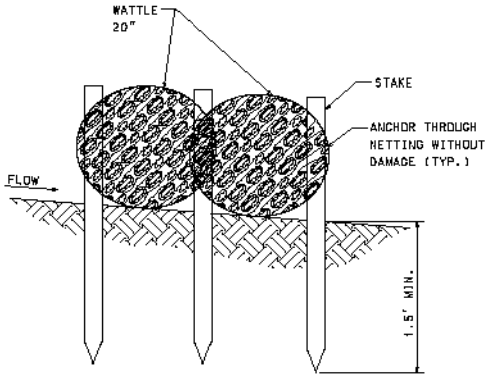

SECTION A-A

NOTES:

1. ANCHORING STAKES SHALL BE SIZED, SPACED, AND BE OF A MATERIAL THAT EFFECTIVELY SECURES THE WATTLE. STAKE SPACING SHALL BE A MAXIMUM OF THREE FEET.
2. OVERLAP ENDS OF WATTLES PER MANUFACTURERS RECOMMENDATIONS (1'MIN.,3'MAX.).
3. TRENCHING OF WATTLES MAY BE NECESSARY IF PIPING BECOMES EVIDENT.

--SPECIFICATIONS--
CURRENT ALABAMA DEPARTMENT OF TRANSPORTATION

THIS DRAWING REPRESENTS DESIGNS PREPARED FOR USE BY THE ALABAMA DEPARTMENT OF TRANSPORTATION AND IS NOT TO BE COPIED, REPRODUCED, ALTERED, OR USED BY ANYONE, OR ANY ORGANIZATION, WITHOUT THE EXPRESSED WRITTEN CONSENT OF THE ALABAMA DEPARTMENT OF TRANSPORTATION REPRESENTATIVE AUTHORIZED TO APPROVE THIS USE. ANYONE MAKING UNAUTHORIZED USE OF THIS DRAWING MAY BE PROSECUTED TO THE FULLEST EXTENT OF THE LAW.

REVISIONS

ALABAMA DEPARTMENT OF TRANSPORTATION
1409 COLISEUM BOULEVARD
MONTGOMERY, AL 36130-3050

DESIGN BUREAU SPECIAL DRAWING

INLET PROTECTION DETAILS OF WATTLES

DRAWN BY: _____
DATE DRAWN: 2006

SPECIAL DRAWING NO.: ESC-400 (SHEET 3 OF 5)

INDEX NO.: 1163-B

REFERENCE PROJECT NO.	FISCAL YEAR	SHEET NO.

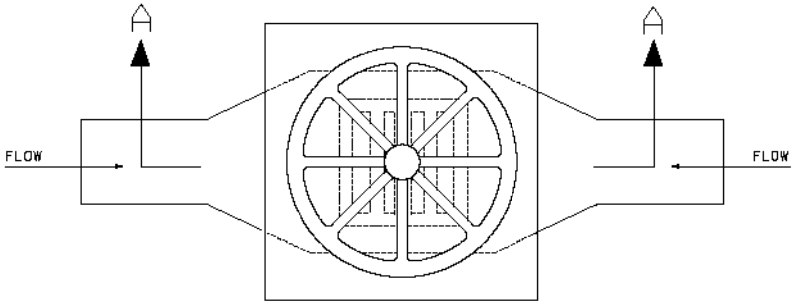

PLAN

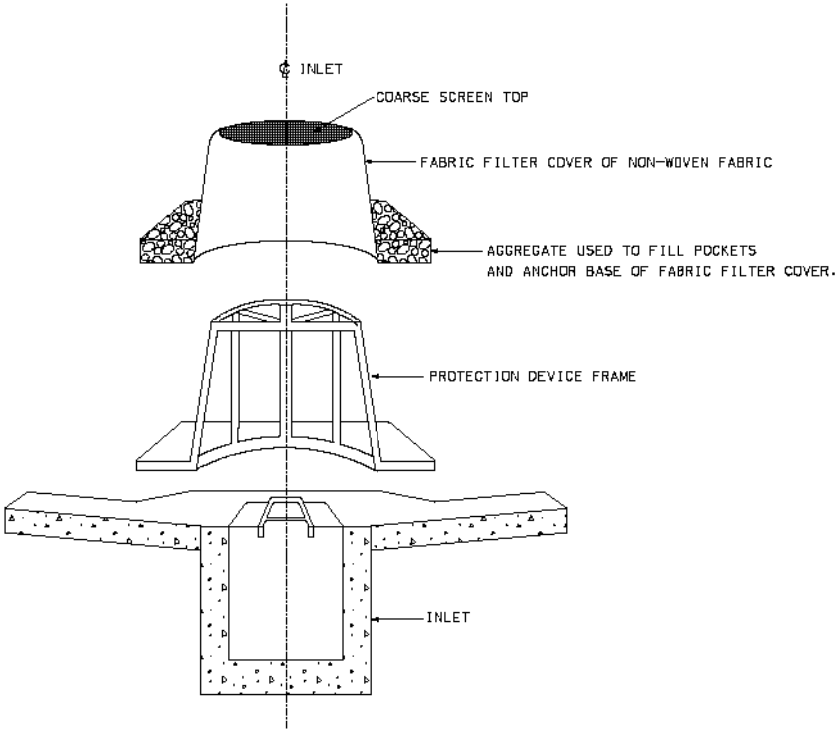

SECTION "A-A"

NOTES:

1. FRAMES WITH EITHER SQUARE OR CIRCULAR BASES MAY BE USED. SELECTED FRAME BASE SHOULD PROVIDE BEST SEAL AROUND INLET AS DIRECTED BY THE ENGINEER.
2. FILL POCKETS AROUND BASE OF FILTER COVER WITH #57 STONE OR SOIL. STONE IS REQUIRED WHEN ANCHORING THE MANUFACTURED INLET PROTECTION DEVICE OVER PAVED DITCH OR FLUME.
3. USE ONLY DURING STAGE 3 OR STAGE 4 INLET CONSTRUCTION. SEE SHEET 1 OF 5.
4. FOR MEDIAN INLET PROTECTION, THE ELEVATION OF THE COARSE SCREEN TOP SHOULD BE A MINIMUM OF 6" BELOW THE ELEVATION OF THE OUTSIDE EDGE OF THE INSIDE SHOULDER.

--SPECIFICATIONS--
CURRENT ALABAMA DEPARTMENT OF TRANSPORTATION

THIS DRAWING REPRESENTS DESIGNS PREPARED FOR USE BY THE ALABAMA DEPARTMENT OF TRANSPORTATION AND IS NOT TO BE COPIED, REPRODUCED, ALTERED, OR USED BY ANYONE, OR ANY ORGANIZATION, WITHOUT THE EXPRESSED WRITTEN CONSENT OF THE ALABAMA DEPARTMENT OF TRANSPORTATION REPRESENTATIVE AUTHORIZED TO APPROVE THIS USE. ANYONE MAKING UNAUTHORIZED USE OF THIS DRAWING MAY BE PROSECUTED TO THE FULLEST EXTENT OF THE LAW.

REVISIONS

ALABAMA DEPARTMENT OF TRANSPORTATION
1409 COLISEUM BOULEVARD
MONTGOMERY, AL 36130-3050

DESIGN BUREAU SPECIAL DRAWING

INLET PROTECTION
DETAILS OF MANUFACTURED
INLET PROTECTION DEVICE

DRAWN BY _____
DATE DRAWN 2006

SPECIAL DRAWING NO. ESC-400 (SHEET 4 OF 5)

INDEX NO. 1163-C

1163C_112006.dgn 9/14/2007 8:10:21 AM

REFERENCE PROJECT NO.	FISCAL YEAR	SHEET NO.

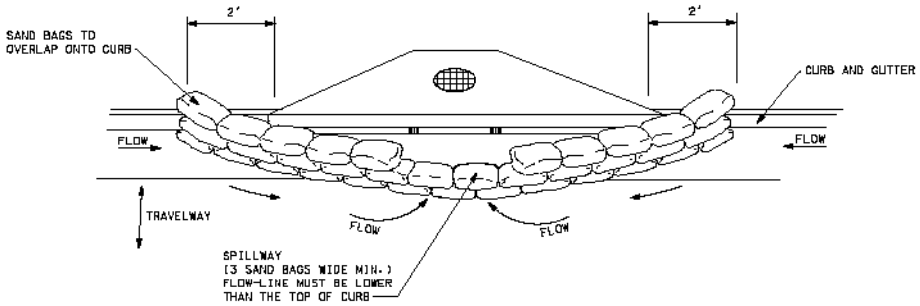

TYPICAL (SAND BAG) PROTECTION FOR INLET IN SAG

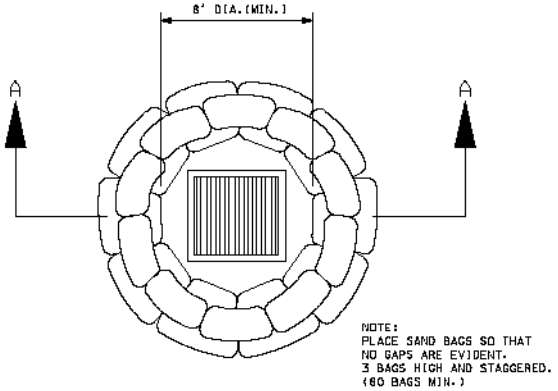

DROP INLET
PLAN VIEW

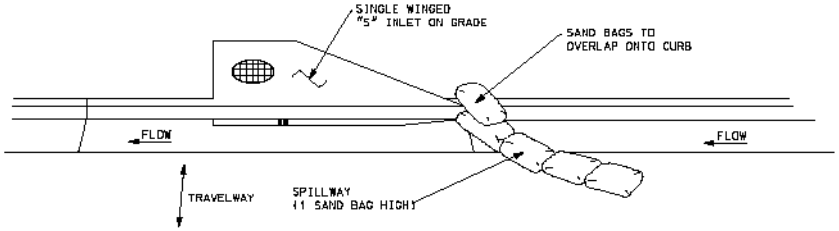

TYPICAL (SAND BAG) PROTECTION FOR INLET ON GRADE

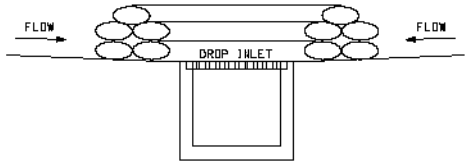

SECTION A-A
SAND BAG BARRIER

CURB INLET PROTECTION NOTES:

1. CURB INLET PROTECTION CAN ALSO BE USED AT OTHER EDGE-OF-PAVEMENT TYPE INLETS SUCH AS TYPE "E" INLETS AT MEDIAN BARRIER LOCATIONS.
2. SEE SHT.3 OF 5 FOR INLET PROTECTION WHERE INLET CONSTRUCTION HAS NOT BEEN COMPLETED.
3. THIS CURB INLET PROTECTION METHOD CAN BE USED DURING ANY STAGE OF BASE AND PAVEMENT CONSTRUCTION.
4. BAG HEIGHT AND NUMBER OF BAGS SHOULD BE BASED ON CURB HEIGHT AND USE OF TRAVELWAY.
5. SEDIMENT SHOULD BE CONTROLLED PRIOR TO ENTERING GUTTER. GUTTER CHECKS AND INLET PROTECTION ARE FOR SECONDARY CONTROL.
6. REMOVE ACCUMULATED SEDIMENT AFTER EVERY RAINFALL. SWEEP SEDIMENT FROM HARD SURFACES AND DISPOSE OF APPROPRIATELY AWAY FROM INLETS AND/OR WATER BODIES.
7. IF DENUDED AREAS EXIST BEHIND THE INLET. A SEDIMENT BARRIER SHOULD BE INSTALLED AROUND IT'S PERIMETER TO CONTROL SEDIMENT. SEE SHT.3 OF 5.
8. PAYMENT FOR CURB INLET PROTECTION FOR WORK REQUIRED BEYOND STAGE 2 (SEE SHT.3 OF 5) WILL BE MADE AS APPROPRIATE FOR ITEMS USED.

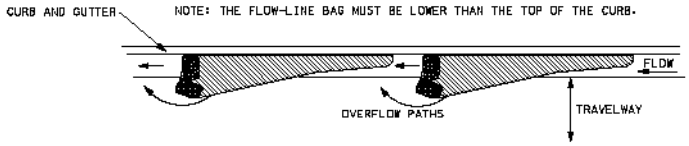

CURB AND GUTTER SEDIMENT
CONTAINMENT SYSTEM

--SPECIFICATIONS--
CURRENT ALABAMA DEPARTMENT OF TRANSPORTATION

THIS DRAWING REPRESENTS DESIGNS PREPARED FOR USE BY THE ALABAMA DEPARTMENT OF TRANSPORTATION AND IS NOT TO BE COPIED, REPRODUCED, ALTERED, OR USED BY ANYONE, OR ANY ORGANIZATION, WITHOUT THE EXPRESSED WRITTEN CONSENT OF THE ALABAMA DEPARTMENT OF TRANSPORTATION REPRESENTATIVE AUTHORIZED TO APPROVE THIS USE. ANYONE MAKING UNAUTHORIZED USE OF THIS DRAWING MAY BE PROSECUTED TO THE FULLEST EXTENT OF THE LAW.

REVISIONS

ALABAMA DEPARTMENT OF TRANSPORTATION
1409 COLISEUM BOULEVARD
MONTGOMERY, AL 36130-3050

DESIGN BUREAU SPECIAL DRAWING

INLET PROTECTION
DETAILS OF SAND BAG

DRAWN BY: _____
DATE DRAWN: 2006

SPECIAL DRAWING NO.: ESC-400 (SHEET 5 OF 5)

INDEX NO.: 1163-D

1163D_112006.dgn 9/14/2007 8:12:31 AM

REFERENCE PROJECT NO.	FISCAL YEAR	SHEET NO.

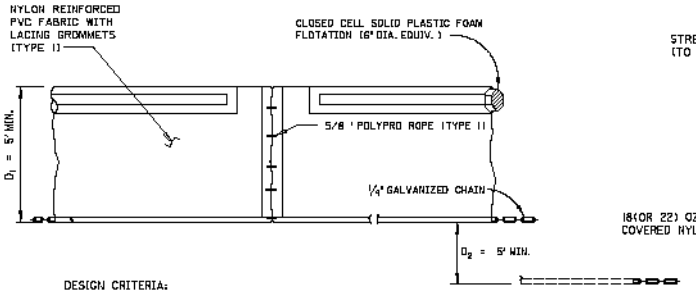

DESIGN CRITERIA:
TYPE I CONFIGURATION SHOULD BE USED IN PROTECTED AREAS WHERE THERE IS NO CURRENT AND THE AREA IS SHELTERED FROM WIND AND WAVES.

D_1 = (SINGLE PANEL FOR DEPTHS 5' OR LESS).
D_2 = (ADDITIONAL PANEL FOR DEPTHS > 5').
CURTAIN TO REACH BOTTOM UP TO DEPTHS OF 10 FEET. TWO(2) PANELS TO BE USED FOR DEPTHS GREATER THAN 10 FEET UNLESS SPECIAL DEPTH CURTAINS SPECIFICALLY CALLED FOR IN THE PLANS OR AS DETERMINED BY THE ENGINEER.

TYPE 1

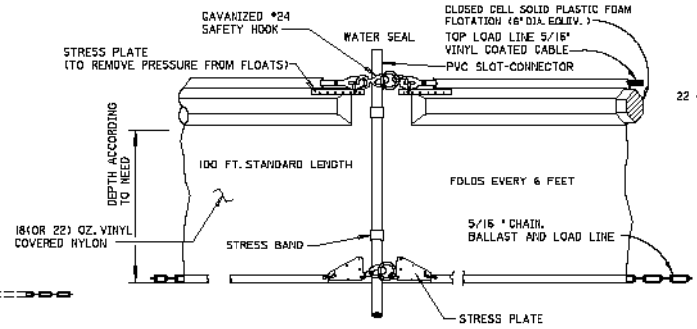

TYPE 2 CONFIGURATION SHOULD BE USED IN PROTECTED AREAS WHERE THERE MAY BE SMALL TO MODERATE CURRENT RUNNING (≤3.5' PER SECOND) AND/OR WIND AND WAVE ACTION CAN AFFECT THE CURTAIN.

TYPE 2

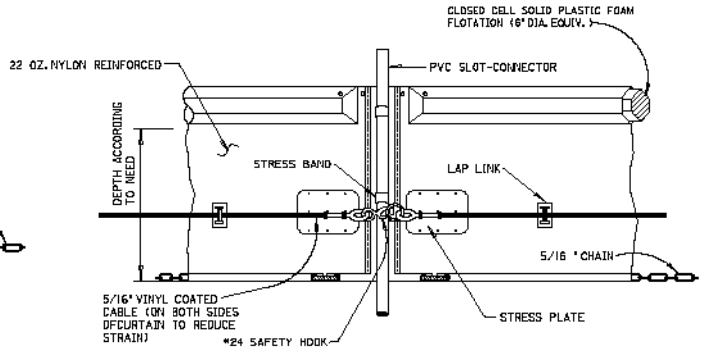

TYPE 3 CONFIGURATION SHOULD BE USED IN AREAS WHERE CONSIDERABLE CURRENT (≤5' PER SECOND) MAY BE PRESENT. WHERE TIDAL ACTION MAY BE PRESENT, AND/OR WHERE THE CURTAIN IS POTENTIALLY SUBJECT TO WIND AND WAVE ACTION.

TYPE 3

TYPICAL FLOATING BASIN BOOM INSTALLATION

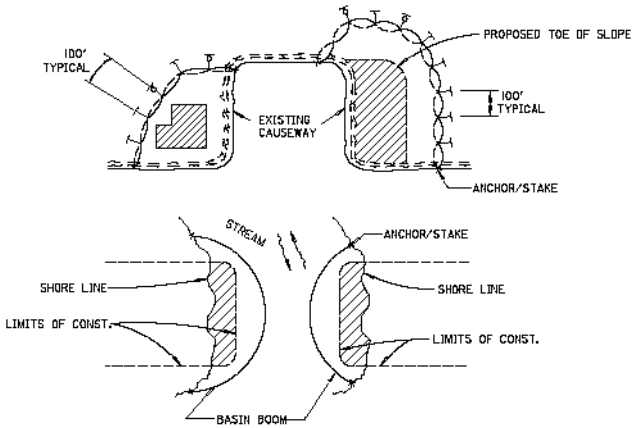

LEGEND

- DREDGE, FILL OR WORK AREA
- MOORING BOUY W/ ANCHOR
- ANCHOR

NOTES:

1. THE CONTRACTOR IS RESPONSIBLE FOR SELECTION OF THE APPROPRIATE TYPE OF FLOATING BASIN BOOM AND INSTALLATION METHODS BASED ON WATER BODY CONDITIONS.
2. FLOATING BASIN BOOMS ARE TO BE INSTALLED IN ACCORDANCE WITH MANUFACTURERS DIRECTIONS.
3. FLOATING BASIN BOOMS CAN BE STAKED AND/OR ANCHORED IN STILL OR MOVING WATERS.
4. FLOATING BASIN BOOMS ARE INTENDED TO PREVENT SEDIMENT MIGRATION WITHIN THE WATER BODY. THEY ARE NOT INTENDED TO BE INSTALLED AS THE PRIMARY SEDIMENT CONTROL METHOD, OR TO CAPTURE SEDIMENT FROM UPLAND AREAS AS A PRIMARY FUNCTION. OTHER UPLAND EROSION AND SEDIMENT CONTROL MEASURES SHOULD BE INCORPORATED AS PROVIDED IN THE PLANS AND STANDARD DRAWINGS.
5. FLOATING BASIN BOOM SHOWN MAY BE SIMILAR TO PROPRIETARY DESIGNS. FUNCTIONALLY EQUIVALENT DESIGNS MEETING CONTRACT REQUIREMENTS MAY ALSO BE USED.

FLOATING BASIN BOOM APPLICATIONS

--SPECIFICATIONS--
CURRENT ALABAMA DEPARTMENT OF TRANSPORTATION

THIS DRAWING REPRESENTS DESIGNS PREPARED FOR USE BY THE ALABAMA DEPARTMENT OF TRANSPORTATION AND IS NOT TO BE COPIED, REPRODUCED, ALTERED, OR USED BY ANYONE, OR ANY ORGANIZATION, WITHOUT THE EXPRESSED WRITTEN CONSENT OF THE ALABAMA DEPARTMENT OF TRANSPORTATION REPRESENTATIVE AUTHORIZED TO APPROVE THIS USE. ANYONE MAKING UNAUTHORIZED USE OF THIS DRAWING MAY BE PROSECUTED TO THE FULLEST EXTENT OF THE LAW.

REVISIONS

ALABAMA DEPARTMENT OF TRANSPORTATION
1409 COLISEUM BOULEVARD
MONTGOMERY, AL 36130-3050

DESIGN BUREAU SPECIAL DRAWING

FLOATING BASIN BOOM

DRAWN BY	SPECIAL DRAWING NO.	INDEX NO.
DATE DRAWN 2006	ESC-501	1164

REFERENCE PROJECT NO.	FISCAL YEAR	SHEET NO.

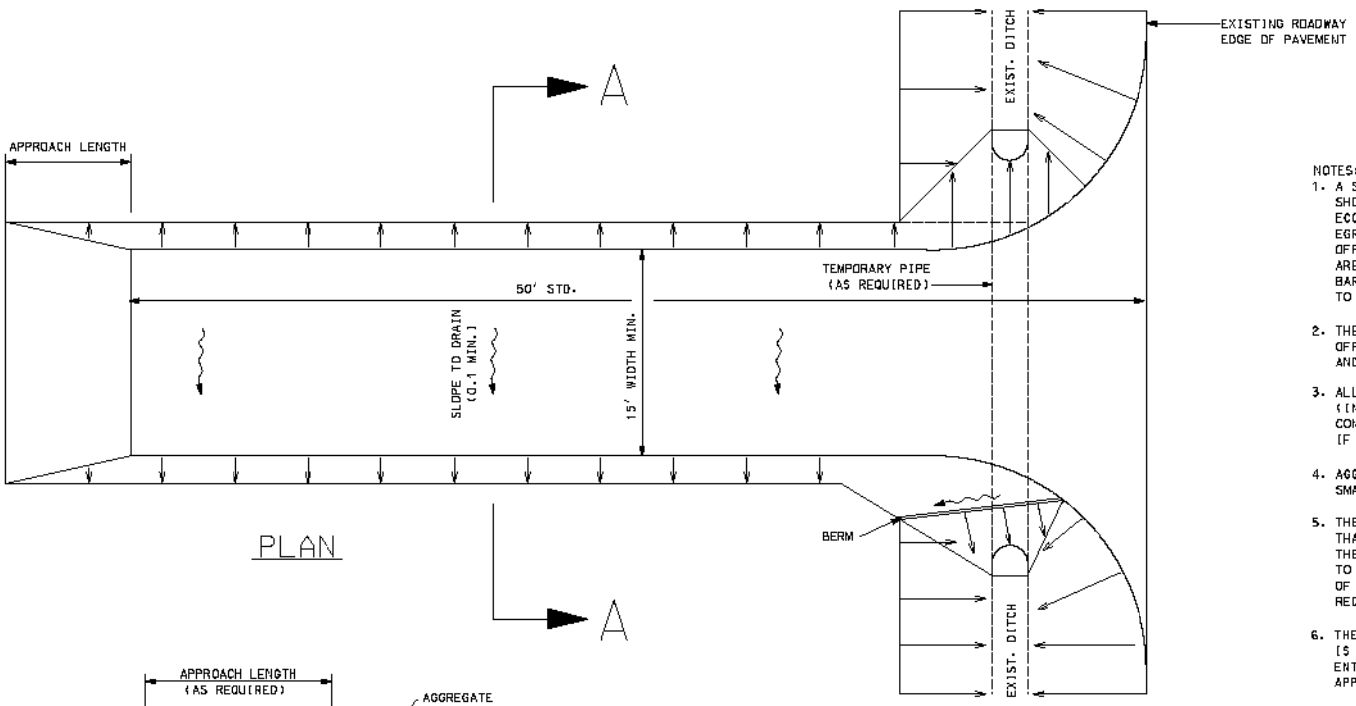

PLAN

NOTES:

1. A STABILIZED CONSTRUCTION ENTRANCE SHALL BE CONSTRUCTED AT LOCATIONS SHOWN ON THE PLANS OR AS APPROVED BY THE ENGINEER BASED ON SAFETY, ECONOMY AND CONSTRUCTION SEQUENCE. THESE ENTRANCES ARE POINTS OF EGRESS FROM UNSTABILIZED AREAS OF THE PROJECT TO PUBLIC ROADS WHERE OFFSITE TRACKING OF MUD COULD OCCUR. TRAFFIC FROM UNSTABILIZED AREAS OF THE PROJECT SHALL BE DIRECTED THRU THE STABILIZED ENTRANCE. BARRIERS, FLAGGING, OR OTHER POSITIVE MEANS SHALL BE USED AS REQUIRED TO LIMIT AND DIRECT VEHICULAR EGRESS ACROSS THE STABILIZED ENTRANCE.
2. THE CONTRACTOR MAY PROPOSE AN ALTERNATIVE TECHNIQUE TO MINIMIZE OFFSITE TRACKING OF SEDIMENT. THE ALTERNATIVE MUST BE REVIEWED AND APPROVED BY THE ENGINEER PRIOR TO IT'S USE.
3. ALL MATERIALS SPILLED, DROPPED, OR TRACKED ONTO PUBLIC ROADS (INCLUDING THE STABILIZED CONSTRUCTION ENTRANCE AGGREGATE AND CONSTRUCTION MUD) SHALL BE REMOVED DAILY, OR MORE FREQUENTLY IF SO DIRECTED BY THE ENGINEER.
4. AGGREGATES SHALL BE ALDOT SIZE #1. SIZES CONTAINING EXCESSIVE SMALL AGGREGATE WILL TRACK OFF THE PROJECT AND ARE UNSUITABLE.
5. THE STABILIZED CONSTRUCTION ENTRANCE SHALL BE MAINTAINED IN A CONDITION THAT WILL ALLOW IT TO PERFORM IT'S FUNCTION TO PREVENT OFFSITE TRACKING, THE STABILIZED CONSTRUCTION ENTRANCE SHALL BE RINSED WHEN NECESSARY TO MOVE ACCUMULATED MUD DOWNWARD THRU THE STONE. ADDITIONAL STABILIZATION OF THE VEHICULAR ROUTE LEADING TO THE STABILIZED ENTRANCE MAY BE REQUIRED TO LIMIT THE MUD TRACKED.
6. THE NOMINAL SIZE OF A STANDARD STABILIZED CONSTRUCTION ENTRANCE IS 15' X 50' UNLESS OTHERWISE SHOWN IN THE PLANS. IF THE VOLUME OF ENTERING AND EXITING VEHICLES WARRANT, A 30' WIDTH MAY BE USED IF APPROVED BY THE ENGINEER.

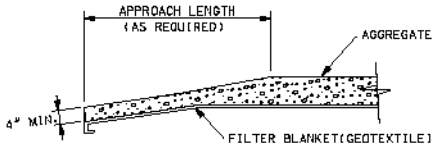

TRANSITION DETAIL

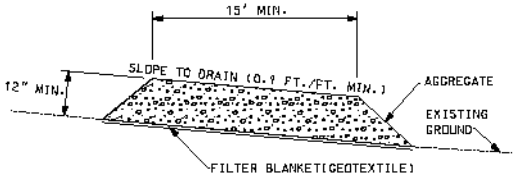

SECTION A-A

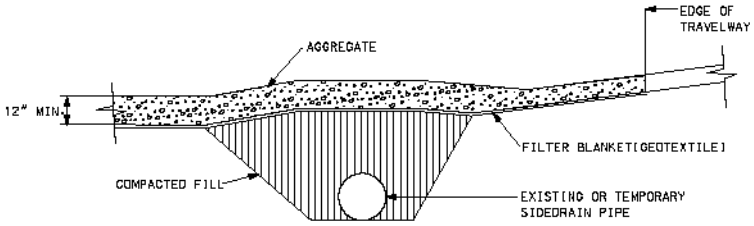

RURAL CONNECTION DETAIL

--SPECIFICATIONS--
CURRENT ALABAMA DEPARTMENT OF TRANSPORTATION

THIS DRAWING REPRESENTS DESIGNS PREPARED FOR USE BY THE ALABAMA DEPARTMENT OF TRANSPORTATION AND IS NOT TO BE COPIED, REPRODUCED, ALTERED, OR USED BY ANYONE, OR ANY ORGANIZATION, WITHOUT THE EXPRESSED WRITTEN CONSENT OF THE ALABAMA DEPARTMENT OF TRANSPORTATION REPRESENTATIVE AUTHORIZED TO APPROVE THIS USE. ANYONE MAKING UNAUTHORIZED USE OF THIS DRAWING MAY BE PROSECUTED TO THE FULLEST EXTENT OF THE LAW.

REVISIONS

ALABAMA DEPARTMENT OF TRANSPORTATION
1409 COLISEUM BOULEVARD
MONTGOMERY, AL 36130-3050

DESIGN BUREAU SPECIAL DRAWING

STABLIZED CONSTRUCTION ENTRANCE

DRAWN BY: _____
DATE DRAWN: 2006

SPECIAL DRAWING NO.: ESC-502

INDEX NO.: 1165

REFERENCE PROJECT NO.	FISCAL YEAR	SHEET NO.

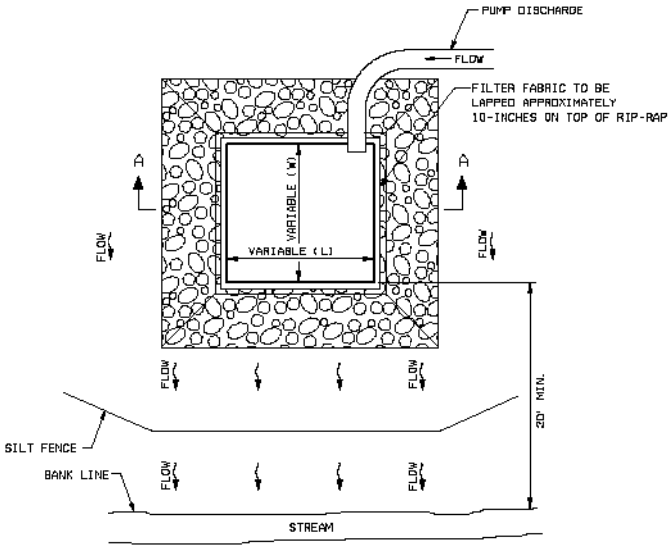

PLAN VIEW

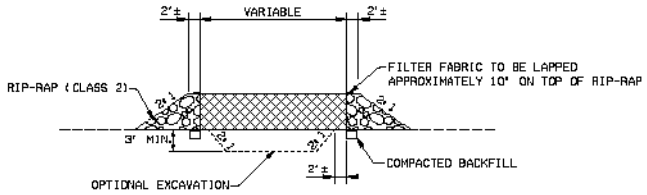

SECTION A-A

TEMPORARY DEWATERING STRUCTURE (BERM AND FABRIC)

NOTES:

1. THE PRIMARY USE OF THE TEMPORARY DEWATERING STRUCTURE IS FOR DEWATERING COFFERDAMS, TRENCHES, SPREAD FOOTINGS, ENCLOSED DITCHES, ETC.
2. THE ACCUMULATED SEDIMENT MUST BE REMOVED WHEN THE BASIN IS HALF FULL.
3. DIVERT ANY STORMWATER AWAY FROM THE TEMPORARY DEWATERING STRUCTURES.
4. THE USE OF SOCKS TO COLLECT SEDIMENT WHEN PUMPING FROM TEMPORARY DEWATERING STRUCTURE INTO AN ADJACENT STREAM MAY BE USED WHEN APPROVED BY THE ENGINEER.
5. INSTALL SILT FENCE BETWEEN STREAM AND/OR DRAINAGE DITCH AND THE TEMPORARY DEWATERING STRUCTURE.
6. TRENCH FILTER FABRIC INTO GROUND, 6" MIN.
7. THE DETAILS SHOWN ARE OPTIONAL RECOMMENDATIONS, BUT NOT MANDATORY.

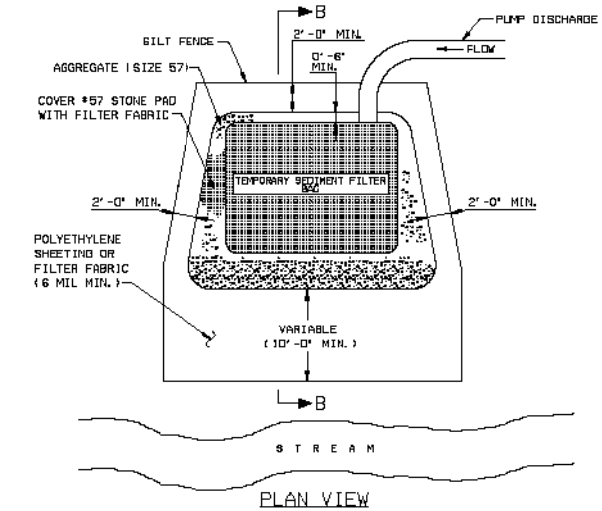

PLAN VIEW

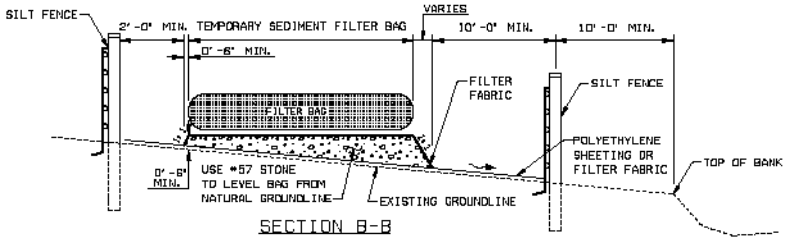

SECTION B-B

TEMPORARY DEWATERING STRUCTURE (FILTER BAG)

NOTES:

1. FILTER BAGS ARE TYPICALLY USED FOR DEWATERING COFFER DAMS, TRENCHES, SPREAD FOOTINGS AND ENCLOSED DITCHES ETC. IN URBAN AREAS AND NEAR SENSITIVE WATER BODIES.
2. THE CONTRACTOR SHALL EXERCISE CAUTION NOT TO BURST OR DAMAGE THE TEMPORARY SEDIMENT FILTER BAG WHEN PUMPING.
3. SEDIMENT SHOULD BE DISPOSED OF IN UPLAND AREAS AWAY FROM WATER BODIES. AFTER REMOVAL OF ACCUMULATED SEDIMENT, DISPOSE OF THE FILTER FABRIC BAG WITH OTHER ITEMS OF CONSTRUCTION DEBRIS.
4. FILTER BAGS MAY ALSO BE PLACED IN AN EXCAVATED PIT FOR REDUNDANCY.
5. THE DETAILS SHOWN ARE OPTIONAL RECOMMENDATIONS, BUT NOT MANDATORY.

TEMPORARY DEWATERING STRUCTURE VOLUMES

PUMP		RATE		STUCTURE VOLUME REQUIRED (CUBIC FEET)
TYPE	(DIA.)	MANUF. CAPACITY	GPM (GALLONS PER MINUTE)	
CONSTRUCTION	2 IN.	8,400 GPH	140 GPM	2,240 CF
	3 IN.	15,800 GPH	260 GPM	4,160 CF
	4 IN.	30,000 GPH	500 GPM	8,000 CF
	6 IN.	66,000 GPH	1,100 GPM	17,600 CF

VOLUME OF DEWATERING STRUCTURE SHOWN IN EROSION AND SEDIMENT CONTROL PLANS IS TO BE BASED ON USE OF 4 INCH CONSTRUCTION PUMP SHOWN IN THE ABOVE TABLE.

--SPECIFICATIONS--
CURRENT ALABAMA DEPARTMENT OF TRANSPORTATION

THIS DRAWING REPRESENTS DESIGNS PREPARED FOR USE BY THE ALABAMA DEPARTMENT OF TRANSPORTATION AND IS NOT TO BE COPIED, REPRODUCED, ALTERED, OR USED BY ANYONE, OR ANY ORGANIZATION, WITHOUT THE EXPRESSED WRITTEN CONSENT OF THE ALABAMA DEPARTMENT OF TRANSPORTATION REPRESENTATIVE AUTHORIZED TO APPROVE THIS USE. ANYONE MAKING UNAUTHORIZED USE OF THIS DRAWING MAY BE PROSECUTED TO THE FULLEST EXTENT OF THE LAW.

REVISIONS

ALABAMA DEPARTMENT OF TRANSPORTATION
1409 COLISEUM BOULEVARD
MONTGOMERY, AL 36130-3050

DESIGN BUREAU SPECIAL DRAWING

TEMPORARY DEWATERING STRUCTURES

DRAWN BY: _____
DATE DRAWN: 2006

SPECIAL DRAWING NO.: ESC-503

INDEX NO.: 1166

REFERENCE PROJECT NO.	FISCAL YEAR	SHEET NO.

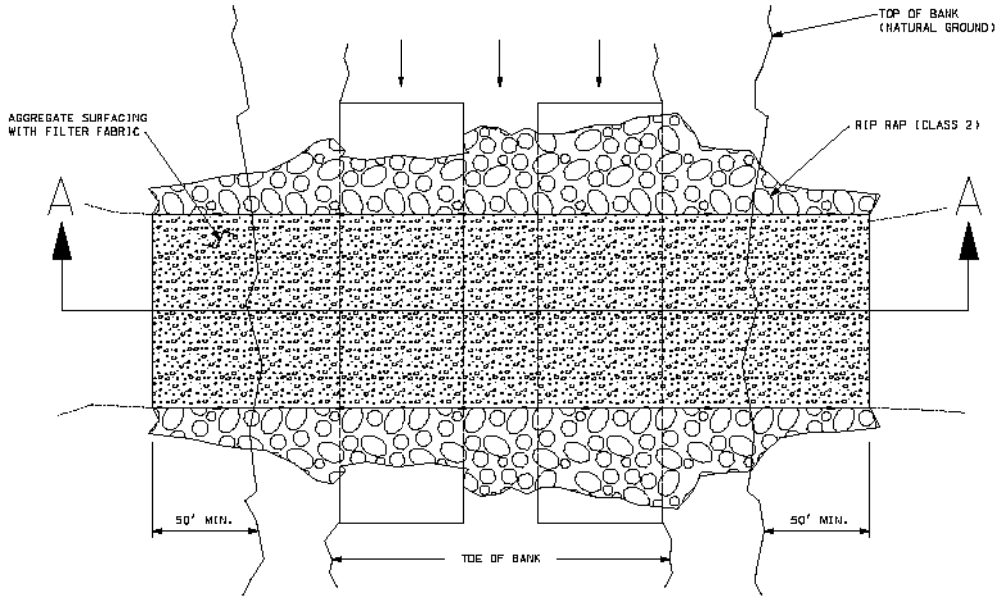

PLAN VIEW

TEMPORARY CULVERT STREAM CROSSING

TEMPORARY CULVERT STREAM CROSSING

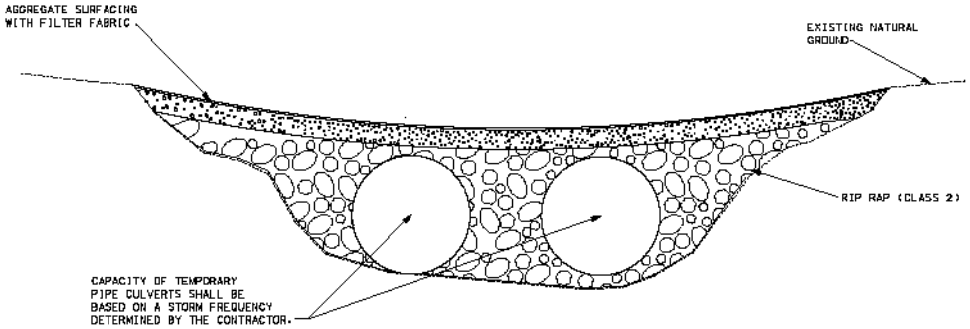

SECTION A-A

NOTES:

1. TEMPORARY CULVERT STREAM CROSSINGS PROVIDE A MEANS FOR VEHICLES AND EQUIPMENT TO SAFELY CROSS A WATERCOURSE WHILE MINIMIZING DAMAGE TO THE CHANNEL AND/OR BANKS.
2. TEMPORARY CULVERT STREAM CROSSINGS, WHEN PERMITTED BY THE ENGINEER, SHALL BE CONSTRUCTED TO SAFELY PASS EXPECTED MEAN WATER FLOW OF THE STREAM FOR THE TIME OF YEAR AND LENGTH OF TIME THAT THEY ARE INSTALLED.
3. TEMPORARY STREAM CROSSINGS SHALL BE DESIGNED TO ENSURE STRUCTURAL INTEGRITY AND STABILITY, AND MAINTAIN NORMAL DOWNSTREAM FLOWS. THE USE OF INSTREAM CROSSINGS AND INSTREAM AGGREGATE FILL SHALL BE MINIMIZED TO THE EXTENT PRACTICABLE.
4. A CONTINUOUS PROGRAM OF EFFECTIVE EROSION AND SEDIMENT CONTROL MEASURES SHALL BE IMPLEMENTED PRIOR TO AND CONCURRENT WITH ANY TYPE OF CONSTRUCTION ACTIVITY WITHIN THE BANKS OF A STREAM. WHEN A CROSSING IS NO LONGER NEEDED, THE STREAMBED AND STREAM BANKS SHALL BE RESTORED TO PRE-DISTURBANCE CONDITIONS, OR SUCH A CONDITION THAT PROVIDES SUBSTANTIALLY EQUIVALENT PROTECTION OF WATER QUALITY.
5. LOCATIONS OR TYPES OF TEMPORARY CULVERT STREAM CROSSINGS WILL NOT BE SHOWN ON THE PLANS AS REQUIRED ITEMS NOR WILL REQUIREMENTS FOR MATERIALS OR CONSTRUCTION BE FOUND IN THE STANDARD SPECIFICATIONS.
6. THE CONTRACTOR MAY PROPOSE OTHER OPTIONS FOR TEMPORARY STREAM CROSSINGS SUCH AS STEEL/TIMBER BRIDGE, FORD OR MATS.
7. THE DETAILS PROVIDED DEPICT A TYPICAL TEMPORARY CULVERT STREAM CROSSING. THE DETAILS SHOWN ARE OPTIONAL RECOMMENDATIONS, BUT NOT MANDATORY. PERMITTING APPROVAL REQUIREMENTS MAY PROHIBIT THE PLACEMENT OF MATERIAL WITHIN STREAM BANKS.

--SPECIFICATIONS--
CURRENT ALABAMA DEPARTMENT OF TRANSPORTATION

THIS DRAWING REPRESENTS DESIGNS PREPARED FOR USE BY THE ALABAMA DEPARTMENT OF TRANSPORTATION AND IS NOT TO BE COPIED, REPRODUCED, ALTERED, OR USED BY ANYONE, OR ANY ORGANIZATION, WITHOUT THE EXPRESSED WRITTEN CONSENT OF THE ALABAMA DEPARTMENT OF TRANSPORTATION REPRESENTATIVE AUTHORIZED TO APPROVE THIS USE. ANYONE MAKING UNAUTHORIZED USE OF THIS DRAWING MAY BE PROSECUTED TO THE FULLEST EXTENT OF THE LAW.

REVISIONS

1. Corrected Section A-A to show the low point in the center of the Channel and expanded Note No. 7 on 07-12-07 by W.M.A.

ALABAMA DEPARTMENT OF TRANSPORTATION
1409 COLISEUM BOULEVARD
MONTGOMERY, AL 36130-3050

DESIGN BUREAU SPECIAL DRAWING

TEMPORARY CULVERT STREAM CROSSING

DRAWN BY: _____
DATE DRAWN: 2006

SPECIAL DRAWING NO. ESC-504

INDEX NO. 1167

1167_112006.dgn 9/14/2007 3:37:39 AM

REFERENCE PROJECT NO.	FISCAL YEAR	SHEET NO.

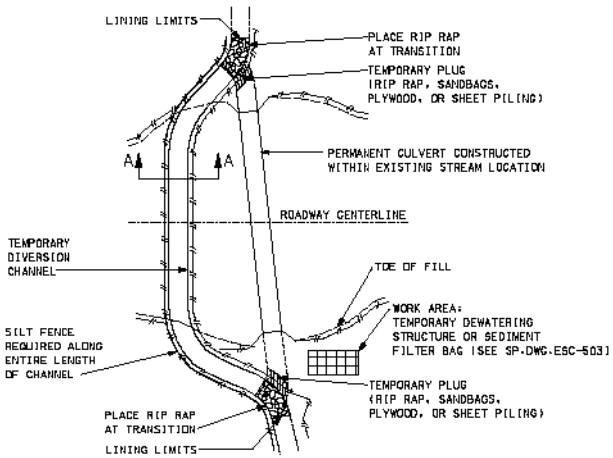

CULVERT CONSTRUCTED
WITHIN EXISTING STREAM

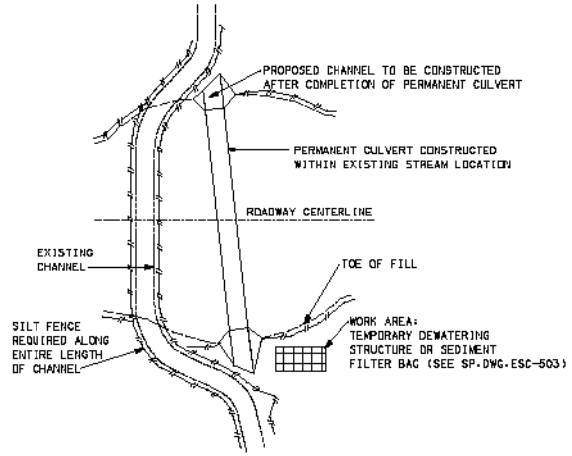

CULVERT CONSTRUCTED
OUTSIDE EXISTING STREAM

NOTES:

1. TEMPORARY DIVERSION CHANNELS MAY BE USED TO DIVERT NORMAL STREAM PATH FLOW FROM AN ERODIBLE AREA UNTIL SUCH AREAS CAN BE STABILIZED.
2. CONTRACTOR SHALL DETERMINE CULVERT AND DIVERSION CHANNEL SIZES, CONSTRUCTION METHODS AND MATERIALS FOR TEMPORARY CULVERT CROSSINGS.
3. FILTER FABRIC OR SUITABLE PLASTIC SHEETING MAY BE USED WITHOUT RIP-RAP FOR CHANNEL FLOW VELOCITIES OF LESS THAN 3.0 FPS.
4. RIP-RAP WITH FILTER FABRIC MAY BE USED FOR CHANNEL FLOW VELOCITIES OF 3.0 FPS TO 9.0 FPS. THE RIP-RAP SHALL BE SIZED USING FHWA HEC-15 DESIGN OF ROADSIDE CHANNELS WITH FLEXIBLE LININGS.
5. LOCATIONS OR TYPES OF TEMPORARY DIVERSION WILL NOT BE SHOWN ON THE PLANS AS REQUIRED ITEMS NOR WILL REQUIREMENTS FOR MATERIALS OR CONSTRUCTION BE FOUND IN THE STANDARD SPECIFICATIONS.
6. DIVERSION CHANNEL SHALL BE STABILIZED AND INSPECTED BY THE ENGINEER BEFORE FLOW IS DIVERTED.
7. DURING CONSTRUCTION OF DIVERSION CHANNEL, DAMAGE TO THE EXISTING STREAM, CANOPY REMOVAL, AND DEPTH OF THE CHANNEL CONSTRUCTION SHALL BE MINIMIZED.
8. NEW CHANNEL CONSTRUCTION SHALL BE COMPLETED IN THE DRY BEFORE DIVERTING WATER FROM THE EXISTING CHANNEL. WHERE THIS IS NOT FEASIBLE, TEMPORARY FLOW DIVERSION STRUCTURES CAN BE USED UNTIL WORK IS COMPLETE. THESE STRUCTURES CAN BE ANY NON-ERODIBLE MATERIAL.

11. CONSTRUCTION OF THE CHANNEL RELOCATIONS AND CULVERTS SHALL PROCEED AS FOLLOWS:
    - 11.1. CONSTRUCT A MEANDERING TEMPORARY CHANNEL CHANGE ADJACENT TO THE PROPOSED CULVERT TO DIVERT WATER TEMPORARILY DURING THE CULVERT CONSTRUCTION. TEMPORARY EROSION CONTROL MEASURES SHALL BE INSTALLED IN ACCORDANCE WITH THE STANDARD SPECIFICATIONS.
    - 11.2. RELOCATE CHANNEL AND CONSTRUCT CULVERT SIMULTANEOUSLY.
    - 11.3. SOD AND/OR RIP-RAP RECONSTRUCTED BANKS AT TRANSITIONS. THE UPPER CHANNEL PLUG IS TO REMAIN IN PLACE UNTIL SUBNOTE (11.1) THROUGH (11.4) UNDER THIS HEADING ARE COMPLETED TO INSURE THAT ALL CONSTRUCTION IS IN THE DRY.
    - 11.4. IF AN EARTH PLUG IS NECESSARY AT THE DOWNSTREAM END OF THE CHANNEL IT SHOULD BE REMOVED FIRST, THEN REMOVE THE UPPER PLUG TO RELEASE WATER INTO THE RECONSTRUCTED CHANNEL.
    - 11.5 PLUGS SHOULD REMAIN IN PLACE UNTIL PERMANENT STABILIZATION OF THE NEW WATER COURSE IS COMPLETED. REMOVAL OF PLUGS SHOULD ONLY BE PERFORMED FOLLOWING ACCEPTANCE OF ALL STABILIZATION WORK BY THE ENGINEER.
12. THE DETAILS PROVIDED DEPICT TYPICAL TEMPORARY DIVERSION CHANNELS. THE DETAILS SHOWN ARE OPTIONAL RECOMMENDATIONS, BUT NOT MANDATORY.
13. THE CONTRACTOR MAY PROPOSE THE USE OF OTHER DIVERSION OPTIONS SUCH AS PIPING, PUMPING OR STAGED CONSTRUCTION.

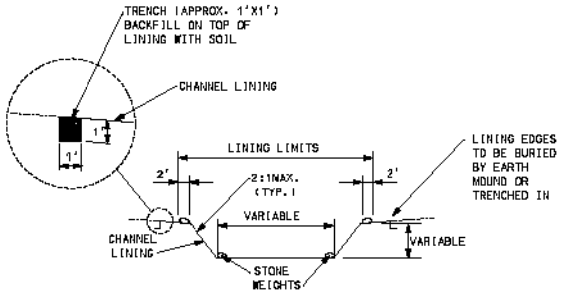

SECTION A-A

TEMPORARY DIVERSION CHANNEL
WITH GEOTEXTILE FABRIC OR PLASTIC LINING

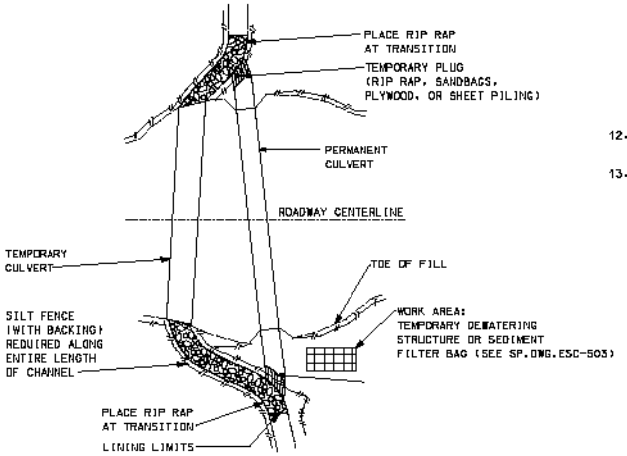

TEMPORARY CULVERT
USED DURING CONSTRUCTION

--SPECIFICATIONS--
CURRENT ALABAMA DEPARTMENT OF TRANSPORTATION

THIS DRAWING REPRESENTS DESIGNS PREPARED FOR USE BY THE ALABAMA DEPARTMENT OF TRANSPORTATION AND IS NOT TO BE COPIED, REPRODUCED, ALTERED, OR USED BY ANYONE, OR ANY ORGANIZATION, WITHOUT THE EXPRESSED WRITTEN CONSENT OF THE ALABAMA DEPARTMENT OF TRANSPORTATION REPRESENTATIVE AUTHORIZED TO APPROVE THIS USE. ANYONE MAKING UNAUTHORIZED USE OF THIS DRAWING MAY BE PROSECUTED TO THE FULLEST EXTENT OF THE LAW.

REVISIONS

ALABAMA DEPARTMENT OF TRANSPORTATION
1409 COLISEUM BOULEVARD
MONTGOMERY, AL 36130-3050

DESIGN BUREAU SPECIAL DRAWING

TEMPORARY STREAM DIVERSION

DRAWN BY _____
DATE DRAWN 2006

SPECIAL DRAWING NO. ESC-505

INDEX NO. 1168